Personal Communications
AS/400 and 3270 for Windows** 95

IBM

Up and Running

Version 4.1

SC31-8205-00

Personal Communications
AS/400 and 3270 for Windows** 95

IBM

Up and Running

Version 4.1

SC31-8205-00

Note

Before using this information and the product it supports, be sure to read the general information under Appendix F, “Notices” on page 119.

First Edition (May 1996)

This edition applies to Version 4.1 of Personal Communications and to all subsequent releases and modifications until otherwise indicated in new editions or technical newsletters. Make sure you are using the correct edition for the level of the product.

Order publications through your IBM representative or the IBM branch office serving your locality. Publications are not stocked at the address below.

IBM welcomes your comments. A form for readers' comments may be provided at the back of this publication, or you may address your comments to the following address:

International Business Machines Corporation
Department CGMD
P.O. Box 12195
Research Triangle Park, North Carolina
27709-2195

When you send information to IBM, you grant IBM a nonexclusive right to use or distribute the information in any way it believes appropriate without incurring any obligation to you.

© **Copyright International Business Machines Corporation 1989, 1996. All rights reserved.**
Note to U.S. Government Users — Documentation related to restricted rights — Use, duplication or disclosure is subject to restrictions set forth in GSA ADP Schedule Contract with IBM Corp.

Contents

About This Book vii
Text Conventions Used in This Book vii
What's in this Package viii

Chapter 1. Welcome to Personal Communications for Windows 95 1
Personal Communications Program 2
Personal Communications Sessions 5
Personal Communications Connections 5
System/390 Emulator Connections 5
AS/400 Emulator Connections 6
Client/Server (Peer) Connections 7
APPN Networking 8
What's New in Personal Communications for Windows 95 V4.1 10

Chapter 2. Getting Ready to Install Personal Communications 15
Workstation Hardware 15
Workstation Hard Disk Requirements 15
Workstation Memory Requirements 16
Workstation Software 16

Chapter 3. Installing Personal Communications 17
Installation 17
Workstation Installation 18
Network Installation 19
Migrating from Personal Communications for Windows 22
Removing Personal Communications 24
Installing the Library Reader 26

Chapter 4. Configuring Sessions 27
Creating a Configuration 28
Saving Configuration Information 29
Changing Configuration Information 31

Chapter 5. Starting and Stopping Emulator Sessions 33
Starting Sessions 33
Starting by Selecting the Session Icon 34
Starting from a Session Window 34
Starting a Workstation Profile from the Run Command Line 35
Starting Multiple Sessions 35
Creating a Batch File 36
Using a Batch File 38
Editing an Existing Batch File 39
Starting Multiple Sessions without a Batch File 39

© Copyright IBM Corp. 1989, 1996

Automatically Starting Sessions 40
Stopping Sessions 40

Chapter 6. Using Emulator Sessions 43
Printing 43
Setting Up the Printer 44
ZipPrint (PC/3270 Only) 45
Editing 46
Editing by Linking to Windows Application Programs 47
Copying Table Data to a Spreadsheet 49
Transferring Files 51
Setting Up a Session Window's Appearance 53
Tool Bar Setup 54
Showing or Hiding the Menu Bar and Tool Bar 55
Getting Help 55
Setting Up and Using the Assist Functions 56
Keyboard and Macro Functions 56
Hotspots Setup 56
Keyboard Setup 58
Pop-Up Keypad Setup 59
Mouse Setup 60
Macro Setup 61
Managing Emulator Sessions 63
Getting Help 64

Chapter 7. AS/400 Utilities 65
Data Transfer (PC400 Only) 65
PC Organizer (PC400 Only) 66
Starting the PC Organizer 66
Getting Help 67
Text Assist (PC400 Only) 68
Text Assist Key Functions 69

Chapter 8. Enabling Client/Server Applications 71
Configuring a Node 71
Starting an SNA Node 72
Stopping an SNA Node 73

Chapter 9. Where to Find More Information 75
Online Help 75
How to Use Online Help 75
Messages 76
Page Fault Messages 76
OIA Messages 76
Personal Communications Library 77
Related Publications 77
Contacting IBM 78
Statement of Service 78

Reporting Defects 78
Other Ways to Contact IBM 81

Appendix A. Directories and System File Modifications 83
Directories Created by the Installation Program 83
PRIVATE Subdirectory 83
SAMPLES Subdirectory 84
PDFPDT Subdirectory 84
Modifying System Files 84

Appendix B. Attachment Considerations 85
COAX Attachment 85
LAN via IEEE 802.2 Attachment 87
LAN via IPX/SPX (NetWare for SAA) Attachment 87
TCP/IP Connection 88
Windows NT SNA Client 89
SDLC - MPA Attachment 90
Advantis (IIN) Attachment 92
IBM Global Network Connection Attachment 92
Home3270 Attachment 93
3270 Attachment via the AS/400 System 94

Appendix C. Adapter Setup Hints and Tips 95
Using Coax (3270) Adapters 95
3278/79 Emulation Adapter (AT-Bus) 95
IBM 3270 Connection Adapter (Micro Channel) 96
IBM 3270 Emulation Credit Card Adapter (PC Card) 96
Using Twinax (5250) Adapters 97
AT-Bus Adapters 97
Micro Channel (MCA) Adapters 98
IBM 5250 Emulation Credit Card Adapter (PC Card) 98

Appendix D. AS/400 Configuration Examples 101
AS/400 Device Description 103
5250 Sessions through One Link 103
AS/400 System Mode Description 104
AS/400 Device Description for Twinaxial Attachments (APPC) Example 105
AS/400 Device Description for Asynchronous Attachments Example 108

Appendix E. Default Key Function Assignments 113
Default Key Functions for a 3270 Layout 113
Default Key Functions for a 5250 Layout 116
Default Key Functions for the Combined Package 118

Appendix F. Notices 119
Trademarks 120

Glossary 121

Index 135

About This Book

This book describes how to install, configure, and start Personal Communications. After you get Personal Communications up and running and begin to perform various tasks, use the online help whenever you need additional information. Refer to Chapter 9, “Where to Find More Information” on page 75 for information about online help, the Personal Communications library, and related publications. Refer to the glossary on page 121 for definitions of technical terms used throughout this book.

This book is for users of both Personal Communications AS/400 V4.1 and Personal Communications AS/400 and 3270 V4.1.

The windows in this book are representative of ones that you might see while working with Personal Communications. Minor variations could occur between what you see on your display and what is in the book.

In this book, *Windows* refers to Windows 95.

Text Conventions Used in This Book

This book uses the following text conventions:

UPPERCASE	Uppercase indicates commands, program keywords, and default values. You can enter these values in uppercase or lowercase.
Bold	Bold type indicates the names of window controls, such as lists, check boxes, entry fields, menu choices, and push buttons.
Italics	Italics indicate: Special emphasis in text or a reference citation. Variables that you supply a value for.
Example type	Example type indicates information that the user is instructed to type at a command prompt or in a window.

This book also uses *icons* (pictures) in the text to help you find different types of information.

This icon represents a note, important information that can affect the operation of Personal Communications or the completion of a task.

© Copyright IBM Corp. 1989, 1996

This icon represents a hint or additional information that can help you complete a task.

This icon represents information that applies to PC400 only.

This icon represents information that applies to PC/3270 only.

What's in this Package

The Personal Communications package contains the following things:

Personal Communications AS/400 and 3270 for Windows 95 diskettes
BookManager Library Reader for Windows
Personal Communications for Windows 95 Up and Running

Chapter 1. Welcome to Personal Communications for Windows 95

Personal Communications is available in two packages:

Personal Communications AS/400 V4.1 for Windows 95, which provides 5250 emulation and connections to Application System/400 (AS/400) systems. This package is referred to as PC400.

Personal Communications AS/400 and 3270 V4.1 for Windows 95, which provides 5250 and 3270 emulation and connections to AS/400 and S/390 systems. The components of this combined package are referred to as PC400 and PC/3270.

The information in this book applies to both packages, except where indicated otherwise.

Personal Communications brings the power of personal networking to your workstation by exploiting the networking capabilities of Windows 95 (hereafter referred to as *Windows*) to provide a variety of connectivity options supporting local area network (LAN) and wide area network (WAN) environments. Whether it's for host terminal emulation, client/server applications, or connectivity, Personal Communications offers a robust set of communications, networking, and administrative features.

Personal Communications is a full-function emulator package with an easy-to-use graphical interface, which includes many useful features such as file transfer and dynamic configuration, all in the Windows 95 environment. PC400 also provides support for Data Transfer.

Personal Communications also supports a variety of SNA-based client application programming interfaces (APIs). You can create applications that use the peer-to-peer client APIs, which are based on LU6.2 and provided by Personal Communications. These APIs let you simultaneously access and process information on peer workstations.

Use Personal Communications in Advanced-Peer-to-Peer Networks (APPN) as an end node, and use the advanced network features: high performance routing (HPR) and dependent LU requester (DLUR).

© Copyright IBM Corp. 1989, 1996

Personal Communications Program

When you install Personal Communications, the main functions that you can use are displayed as icons in the Personal Communications folder on the Start menu.

A brief explanation of each function follows:

Start or Configure Session
Use this icon to start or configure new emulator sessions. During configuration, you can specify the session type, screen size, LU number, graphics support, the type of communications link and its parameters, as well as other information. You can save all this information in a workstation profile (***.WS**) and create an icon for the session. Then you can start the session by just clicking the session icon.

SNA Node Configuration
Use this icon to configure an SNA node and associated resources or to change advanced configuration parameters. You need to create an SNA node configuration to enable client/server and peer communications.

Administrative and Problem Determination (PD) Aids

Display SNA Sense Data
This is an administrative program that displays SNA sense data and associated explanations. Sense data is SNA error information and is located in internal SNA flows, error logs, error messages, and traces. Some Personal Communications error messages include sense data.

Log Viewer
Use this icon to view the Personal Communications message log. Personal Communications logs errors and informational messages during initialization and operation.

SNA Node Operations (systems management)
Use this icon to perform SNA node operations, such as starting or stopping resources or displaying resource information.

Trace Facility
Use this icon to turn trace functions on and off and to capture communication-protocol information that passes between your workstation and other host systems. You can use traces to resolve communication problems.

Product Information

Readme - Please!
This includes important information that became available too late to be included in this book or that might be of special interest.

You can install the following books, which are in BookManager format. However, before you can view them, you must first install the Library Reader (as described on page 26).

- *Up and Running*
  This book describes how to install, configure, and start Personal Communications.
- *Reference*
  This book contains reference information that you might need when installing or using Personal Communications.
- *Emulator Programming*
  This book provides necessary programming information for you to use the IBM Personal Communications High-Level Language Application Program Interface (HLLAPI), Dynamic Data Exchange (DDE), Personal Communications API (PCSAPI), and Server-Requester Programming Interface (SRPI).
- *Client/Server Communications Programming*
  This book describes support for the APPC and LUA application programming interfaces (APIs).
- *System Management Programming*
  This book describes how to use the Node Operations Facility (NOF) application programming interface (API).

APPC and CPI-C Utilities

Note

These utilities are available in U.S. English only.

THESE PROGRAMS ARE PROVIDED ON AN AS-IS BASIS WITHOUT ANY WARRANTY OF ANY KIND, INCLUDING THE WARRANTIES OF MERCHANTABILITY AND FITNESS FOR A PARTICULAR PURPOSE WHICH ARE EXPRESSLY DISCLAIMED.

Check Connection (APING)

This is a sample CPI-C program that verifies network connections. You can use APING to establish network connections, diagnose problems, and take simple performance measurements. APING exchanges data packets with a partner computer and measures how long the data transfer takes.

Introduction

Transfer File (AFTP)
Use the AFTP file transfer program, which provides a fast and efficient transfer of text and binary files.

Emulator Utilities

Data Transfer (PC400 only)
Use this icon to transfer data between a workstation and an AS/400 database.

Menu-Bar Customization Utility
Use this icon to customize the menu bar in the session window.

Multiple Sessions
Use this icon to create batch files (*.BCH), which specify multiple emulator sessions (workstation profiles) or other Windows 95 programs that you want to start concurrently. Again, you can create an icon for each batch file and start the programs just by clicking the icon.

ZipPrint (PC3270 only)
Use this icon to start the ZipPrint program, which allows you to print host system files or screens, PROFS or OfficeVision notes, calendars, and documents, CMS files, and XEDIT workspaces. It adds an item to the menu bar of the session window.

Personal Communications Sessions

The sessions that Personal Communications provides are logical connections enabling communication between your workstation and host system. The following session types are available:

Display session
Use your workstation as a display terminal connected to the host system.

Printer session
Use your workstation printer as a host system printer.

Client/server session
Establish connections that allow peer communications using CPI-C and APPC (LU6.2).

Personal Communications Connections

Personal Communications supports a variety of connections to the following host systems:

S/390

AS/400

System/390 Emulator Connections

Interface	Attachment
LAN	LAN via IEEE 802.2 LAN via NetWare** for SAA (IPX**/SPX) Telnet3270 3270 via AS/400 APPC3270 via LAN Windows NT** client (using the FMI interface) Windows NT client (using the LUA interface) Windows NT client (using the APPC interface) Dependent LU Requester (DLUR)

SNA Distributed Function Terminal
Non-SNA Distributed Function Terminal

SNA-over-Async
IBM Global Network Connection
Home3270
Advantis** (IIN)
Dependent LU Requester (DLUR)

Synchronous Data Link Control (MPA)
3270 via AS/400 (passthru)
APPC3270 via SDLC
Dependent LU Requester (DLUR)

3270 via AS/400 (passthru) (twinaxial)
Dependent LU Requester (DLUR)

AS/400 Emulator Connections

Interface	Attachment
	LAN via IEEE 802.2 Telnet5250 Windows NT Client (using the APPC interface)
	Synchronous Data Link Control (MPA)
	Twinaxial Data Link Control (APPC)

SNA-over-Async

Supported PC400 Functions

The following PC400 functions are supported by attachment type, as follows:

Adapter Card	Attachment	PC400 Functions		
		5250 Display	5250 Printer	Data Transfer
LAN	IEEE 802.2	X	X	X
	Telnet 5250	X	–	–
	Windows NT Client	X	X	X
5250	Twinaxial Data Link Control (APPC)	X	X	X
COM port	SNA-over-Async	X	X	X
SDLC	Synchronous Data Link Control	X	X	X

X indicates which functions are supported.
– indicates which functions are not supported or not applicable.

Client/Server (Peer) Connections

Personal Communications provides APPN end node support for workstations, allowing them to communicate more flexibly with other systems in the network.

When your workstation is defined as an APPN end node, an APPN network node server provides the following directory and routing services for your workstation:

Intermediate session routing
Directory services
Topology and route selection services

You can establish client/server connections to a variety of computers, such as S/390, AS/400, RS/6000 with AIX SNA Services, workstations with OS/2 and Communications Manager or with Windows 95 and Personal Communications. Available client/server (or *SNA*) connection types are:

LAN via IEEE 802.2
Synchronous Data Link Control (MPA)
Twinaxial Data Link Control (APPC)
SNA-over-Async

APPN Networking

Advanced Peer-to-Peer Networking (APPN) is the underlying networking protocol that routes APPC traffic through intermediate nodes in the network. For instance, when Program A uses APPC to talk to Program B, APPN finds the node where Program B is located and directs the APPC traffic through the network.

APPN includes several features that help reduce the amount of configuration required to set up and maintain a network. These features automate many tasks that are time-consuming, complicated, and error-prone. For example, if you're installing a new workstation that uses APPN, you don't have to set up configuration information for every workstation you want to communicate with. You simply provide the name of the computer and the address of the intermediate node that handles your traffic. APPN takes care of the rest of the information needed to route APPC traffic to and from your workstation.

If you connect to an APPN network, you simplify your own configuration and make it easier for other computers in the network to find you.

APPC

Advanced program-to-program communication (APPC), also known as LU 6.2, is software that enables high-speed communications between programs on different computers, from portables and workstations to midrange and host computers. APPC software is available for many different operating systems, either as part of the operating system or as a separate software package.

APPC is a communications protocol that enables programs on different computers to “talk to” each other. APPC provides the interface between the programs and the networking hardware and software and defines the rules that programs use to exchange information.

APPC serves as an interface between application programs and the network. When the communications application on your workstation passes information to the APPC software, APPC takes the information and sends it on to a network interface, such as a token-ring adapter card. The information travels across the network to another computer, where the APPC software receives the information from the network interface. APPC puts the information back into its original format and passes it to the corresponding communications application.

APPN Network Enhancements

By participating in an APPN network, Personal Communications workstations can also take advantage of two additional functions:

high performance routing
dependent LU requester

High Performance Routing (HPR): Personal Communications supports high performance routing (HPR) over token-ring and Ethernet connections, which increases data routing performance and reliability. HPR supports the rapid transport protocol to provide non-disruptive rerouting around network outages, efficient selective retransmission, and end-to-end data integrity and congestion control.

Dependent LU Requester (DLUR): A DLUR is an APPN end node or network node that owns dependent LUs, but requests that a DLUS provide the system services control point (SSCP) for those dependent LUs. A DLUS controls conversion from a subarea environment to an APPN environment, allowing you to maintain central management of remote dependent LUs while benefiting from an APPN network.

DLUR allows dependent LUs (LU 0, 1, 2, 3, and dependent LU 6.2) to benefit from an APPN network. It supports dynamic and multiple paths through the network and eliminates the need for dependent LUs (or their gateway) to be adjacent to the VTAM host.

Personal Communications uses the support in VTAM V4R2 for dependent LUs through APPN networks and combined subarea and APPN networks. The dependent LU server function (in VTAM) provides dependent secondary logical unit (SLU) support by establishing an LU 6.2 session between a dependent LU requester node (DLUR), and a dependent LU server node (DLUS).

What's New in Personal Communications for Windows 95 V4.1

Personal Communications for Windows 95 Version 4.1 contains many enhancements. Following is a short description of the new and enhanced functions since Personal Communications for Windows Version 4.0 and APPC Networking Services for Windows Version 1.0.

Installation and Configuration Enhancements

– **Automatic Dialing**

The following improvements have been made to host connections that require a dial operation.

- Support for Windows 95 modem configuration
- Improved performance
- Improved automatic-dialing customization
- Setup for quick dial and dial without disconnecting
- Idle time out
- Support for V42bis modems with data compression
- Support for the IBM Global Network Connection using high performance option
- Easy selection of a backup telephone number
- Display of the description with the telephone number
- Setup for dial mode, speaker volume, modem operational mode, and auto-answer mode.

– **Installation**

Installation has the following enhancements.

- Selective installation to minimize hard disk space requirements
- Ability to remove Personal Communications from your workstation

– **SNA Node Configuration**

SNA Node Configuration allows you to create SNA configurations for SNA nodes and associated resources and to configure advanced options such as performance, tuning, security, and transaction programs. SNA configurations initialize SNA nodes and enable client/server and peer communications.

– **National Language Keyboard Support**

Personal Communications now displays improved graphics for non-US English keyboards when you customize your keyboard.

Personal Communications supports a variety of code pages, character sets, and keyboards, including the Microsoft** Natural Keyboard.

Communication Enhancements

- **Advanced Peer-to-Peer Networking**

  Personal Communications now allows participation in Advanced Peer-to-Peer Networking (APPN) as an end node, including the advanced network capabilities provided by high performance routing (HPR) and dependent LU requester (DLUR).

-

APPC3270 Support (PC/3270 only)

  The APPC3270 attachment has been added to PC/3270 configuration to allow migration to APPC and Advanced Peer-to-Peer Networking (APPN) networks. APPN networks are more flexible in their layout and easier to maintain than traditional SNA networks.

- **End Node Support**

  End node support allows your workstation to participate in an APPN network using the services of a network node, including dynamic routing and topology.

  By connecting your workstation as an end node to an APPN network node, you can take advantage of the APPC and CPI Communications application programming interfaces (APIs) now provided with Personal Communications.

  Using these APIs, you can write programs to communicate with many other IBM SNA products. You can write programs without knowing the details of the underlying network. All you need to know is the name of the partner LU; you do not need to know its location. APPN determines the partner LU location and the best path for routing data. In Networking Services, support of LEN nodes allowed your workstation to participate in an APPN network.

- **High-Performance Routing**

  Personal Communications supports high performance routing over token-ring and Ethernet connections, which increases data routing performance and reliability.

- **Dependent LU Requester**

  Personal Communications uses the support in VTAM V4R2 for dependent LUs through APPN networks and combined subarea and APPN networks.

What's New

–

IBM Global Network Connection (PC/3270 only)

Support for the IBM Global Network Connection enables high performance for 3270 sessions over telephone lines.

–

Telnet 3270 (PC/3270 only)

The following improvements have been made to Telnet 3270.

- Printer session support (via RFC1646 or RFC1647)
- SSCP-LU session support (via RFC 1647)

– ***Windows NT Support***

Personal Communications runs on a Windows NT workstation that either has the TCP/IP environment set up or Microsoft SNA Server client files installed. You can use one of the following attachment types:

- Telnet 3270
- Telnet 5250
- Windows NT client (using the FMI interface)
- Windows NT client (using the APPC interface)
- Windows NT client (using the LUA interface)

Personal Communications requires the use of the PCSMON Trace Formatter (PCSMON.EXE) on Windows NT workstations instead of the Trace Facility.

Emulation Enhancements

– **EHLLAPI Enhancements**

Personal Communications now supports both 16- and 32-bit EHLLAPI. Also, more than one emulator high-level language application programming interface (EHLLAPI) application can share a presentation space.

– **OEM Twinaxial Adapter Support**

The virtual device driver (VxD) for IBM twinaxial adapters has been redesigned to support adapters from IBM and other equipment manufacturers (OEMs). The OEM must provide a VxD that communicates with the IBM VxD; several OEMs have written such drivers.

– **Tool Bar Customization**

You can quickly and easily create, edit, and delete tool bar items, as well as to save and load customized tool bars. When you customize the tool bar, you can change the order of items, add and delete items, change the function, title, or graphic associated with any item, change the fonts, colors, and other tool bar visual style elements.

In addition, when you place the cursor over a tool bar button, a short description of the button's function appears.

–

Printer Form Feed Options (PC/3270 only)

The following improvements have been made to printer form feed.

- "Ignore FF when at first print position..." for LU 1 jobs. This was previously available only on LU 2, LU 3, and non-SNA sessions.
- Provide consistency for the FF option between printer definition table (PDT) and non-PDT modes.

–

Column Separator (PC400 only)

This enhancement lets you choose the shape of a column separator. Select a column separator in the shape of a dot or vertical bar in Display Setup.

Client Application Support

Personal Communications now includes 32-bit application support for the following emulator-based APIs:

– Emulator High-Level Language API (EHLLAPI)
– Dynamic Data Exchange (DDE)
– Server-Requester Programming Interface (SRPI)
– Personal Communications API (PCSAPI)

Personal Communications also provides several SNA-based client APIs offering flexibility in client/server and peer applications. This diverse set of APIs enables communication with remote systems and supports a variety of protocols and hardware links.

– Common Programming Interface for Communications (CPI-C) 2.0

  This API is an X/OPEN industry standard interface and enables greater application portability across different operating systems.

– Advanced program-to-program communications (APPC)
– RU Interface (RUI) of the Conventional LU Application Interface (LUA)
– Common Services Programming Interface (CSV)

With limited exceptions, applications should run on APPC and CPI-C without the need for a recompilation.

What's New

Management Services

Management services provide a method of reporting potential problems to a management services focal point such as the NetView program.

Refer to *System Management Programming* for more information about management services.

Common Services

Common Services verbs are available to application programs that use the Personal Communications APIs.

The common services verbs perform the following tasks:

- Provide ASCII-to-EBCDIC, EBCDIC-to-ASCII, and user-defined conversions on data streams
- Produce the translation table for specified code pages so user programs can convert character strings
- Send network management services messages to a network management services control point

Refer to *System Management Programming* for more information about common services verbs.

Chapter 2. Getting Ready to Install Personal Communications

Personal Communications supports a wide range of workstations that use different bus architectures and peripheral components. There are hardware and software requirements, as well as memory and storage requirements, to consider when planning the installation of Personal Communications.

The following sections describe these requirements for installing Personal Communications and list support for monitors, adapters, and keyboards.

Workstation Hardware

Personal Communications supports workstations with the following hardware:

Table 1. Workstation Hardware Support

System unit	The recommended system unit has an Intel** 80386** or higher microprocessor and at least one 1.44-MB 3.5-inch diskette drive.
Display Monitor	All display monitors supported by Windows 95.
Video Adapter	All video adapters supported by Windows 95.
Keyboard	Enhanced keyboard (101-key, 102-key, 104-key) Space-saving keyboard Microsoft Natural Keyboard
Printers	All printers supported by Windows 95 when a PDT file is not used. For more details about printers supported in PDT mode, refer to *Personal Communications Reference*.
Communication adapters	LAN, SDLC, twinaxial, coaxial, and COM Port communication adapters.
Modems	All asynchronous modems that use the Hayes AT command set and are supported by Windows 95. Synchronous (SDLC) modems attached to a multi-protocol adapter (MPA).

Workstation Hard Disk Requirements

You need at least 10 MB of disk space to install Personal Communications on your workstation. If you use the Run from server installation option, Personal Communications requires less than 1 MB of disk space on your workstation.

© Copyright IBM Corp. 1989, 1996

Workstation Memory Requirements

Personal Communications is a native Windows 95 application. The amount of memory you need depends on several factors, including the attachment type, number of sessions, and the use of programming interfaces such as Emulator High-Level Language Application Programming Interface (EHLLAPI) and Dynamic Data Exchange (DDE). While Personal Communications will run on 4 MB workstations, a minimum of 8 MB of memory is recommended.

If you want to run Personal Communications and other applications simultaneously, you might need to add more memory to your workstation.

Workstation Software

Personal Communications for Windows 95 requires that your workstation have Microsoft** Windows 95 or Windows NT installed.

Depending on your Personal Communications configuration, your workstation also might need one or more of the following programs:

Microsoft SNA Server Windows 95 Client

Microsoft SNA Server Windows NT Client

NWIPXSPX.DLL, included in Novell** Windows application products such as the NetWare Workstation for DOS/Windows and on the WINUPn diskettes.

You need to set up your Windows environment for the Novell network and you must install NWIPXSPX.DLL in the WINDOWS/SYSTEM directory.

To obtain the WINUPn diskettes from the IBM PC Company BBS, use an internet browser and go to URL:

http://pccbbs.raleigh.ibm.com

Host Requirements

Refer to the *Personal Communications Reference* for information about software and hardware requirements for host systems.

Chapter 3. Installing Personal Communications

This chapter describes how to install Personal Communications either on a network server or on a workstation. When you install Personal Communications on a workstation, you choose to run Personal Communications either from the workstation or from a server. This chapter also describes how to:

set up the Personal Communications diskette images on a network server
install the Library Reader for our BookManager books
upgrade from a different version of Personal Communications
remove Personal Communications from a workstation or a server

Note

If you have a different version of Personal Communications already installed, see “Migrating from Personal Communications for Windows” on page 22 for more information.

If you are reinstalling Personal Communications V4.1 for Windows 95, or are upgrading from Personal Communications for Windows, make sure that Personal Communications is not running before you continue with setup.

Installation

You can install Personal Communications from diskette or from a network server. You can also install Personal Communications from CD-ROM; refer to the *CD-ROM Guide to Installation* for details.

If you have questions during installation, press F1 to display the online helps for additional information.

To stop installation, click **Cancel** in any window, or press F3 or Esc if Cancel is not available.

© Copyright IBM Corp. 1989, 1996

Installing Personal Communications

If you want to install Personal Communications...	Go to...
On a workstation	Page 18
On a server	Page 20

Note

If you plan to install the Personal Communications documentation, you need to install the Library Reader first. Refer to “Installing the Library Reader” on page 26 for details.

Workstation Installation

Note

Before you begin setup, make sure all other applications are stopped.

To install Personal Communications on a workstation:

1. Insert *Personal Communications Diskette 1 (Installation)* into drive **A**.
2. Select **Run** from the Start menu.
3. In the Run window, type A:\SETUP where A is the name of your diskette drive and then click **OK**.

   The Personal Communications Welcome window appears.
4. Select **Run from my workstation** and then click **Next**.
5. Select one or more components you would like to install and then click **Next**.

   If you want to install one of the emulation components and you plan to use an SNA connection, make sure to also select **Communications APIs**.
6. Type the drive and directory where you want to install Personal Communications, or accept the default drive and directory, **C:\Personal Communications**. If you have a different version of Personal Communications on your workstation, refer to “Migrating from Personal Communications for Windows” on page 22 for more information about upgrading and migration.
7. If you selected one of the Emulator components, you need to select an installation option and then click **Next**.

If you select **Custom Installation**, the Select Components window appears. The amount of disk space required for each option and the amount available on the destination disk displays.

8 Select the components you want to install from the list and then click **OK**.

The component is not selected unless a check mark appears next to the component name. To select a component, click the Check column next to the component name or click on the component name and then press the spacebar.

9 Accept "Personal Communications" as the name of the destination directory or, to select another name, click **Browse** and then select from the Directories list. After you make your choice, click **Next** if you are ready to install Personal Communications. If you want to change any installation options, click **Continue with installation** to uncheck the check box and then click **Next**.

If you are upgrading from a previous version of Personal Communications, this is the last window where you can cancel setup.

10 Accept "IBM Personal Communications" as the name of the program folder, type another name, or select another folder from the list and then click **Next**.

11 Follow the instructions that appear on the screen and insert the remaining program diskettes.

If you want your AUTOEXEC.BAT file modified so you can run applications that use the client APIs supported by Personal Communications, click **Yes**.

If you have installed the communications APIs, you will be asked whether you want to install the IEEE 802.2 interface provided with Personal Communications. If you click **Yes**, detailed instructions and the Network configuration window will appear on the screen.

You will be prompted to restart Windows because some of the Windows settings have changed.

This completes the installation of Personal Communications.

Network Installation

If you install Personal Communications on a network server, workstations connected to it can share the program files; there is no need to install them on the client workstations. You can install Personal Communications on a network server running OS/2, Windows NT, or Windows 95.

Before you can install Personal Communications from a network server, place the Personal Communications diskette images on the server first.

When you run Personal Communications from a server, your workstation profiles and other private files are stored on your workstation (or in your private directory on the

server) in a subdirectory named **PRIVATE**. When you start Personal Communications, the program files are loaded from the server, but your private files are used to define your host sessions.

Note

If you want to run Personal Communications from a network server and use Microsoft SNA Server, the SNA Server client files must also reside on the network server.

Installing Personal Communications on a Network Server

Note

You can install to a server only from a Windows 95 workstation.

To install Personal Communications on a network server:

1. Insert *Personal Communications Diskette 1 (Installation)* into your diskette drive.
2. Select **Run** from the Start menu.
3. In the Run window, type A:\SETUP where A is the name of your diskette drive and then click **OK**.

   The Personal Communications Welcome window appears.
4. Click **Install Personal Communications on a server** and then click **Next**.
5. Type the server drive and directory and accept “IBM Personal Communications” as the directory where you want to install Personal Communications and then click **Next**.
6. Follow the instructions that appear on the screen and insert the remaining program diskettes.
7. When confirmation messages appear, click **OK** to continue.

   This completes the installation of Personal Communications on the network server.

Make sure the server is set up to share the network drive where the Personal Communications program files are stored. Refer to your operating system documentation for more details.

Copying Diskette Images to a Network Server

You can copy Personal Communications diskette images to a network server so any workstations attached to the network can install Personal Communications from the server.

1. Create a directory on the network server for each Personal Communications diskette. The directories must be sibling directories, but they can be created in a subdirectory off the root directory.

   ```
   \DISK1
   \DISK2
     .
     .
   \DISKn
   ```

2. Copy each diskette to its corresponding directory on the network server.

   ```
   COPY a: .
   ```

Setting up a Client to Run from a Network Server

To set up a client to run Personal Communications from a server:

1. Insert *Personal Communications Diskette 1 (Installation)* into the diskette drive, or access the network drive where the Personal Communications diskette images were installed.
2. Select **Run** from the Start menu.
3. In the Run window, type *path*\SETUP and then click **OK**.

   The Personal Communications Welcome window appears.
4. Select **Run Personal Communications from a server** and then click **Next**.
5. Select one or more components and then click **Next**.
6. In the **Code** field, type the network drive and directory where Personal Communications is installed.

Note

Make sure the network drive location is always the same drive when you use your workstation. You can use the Windows Explorer to map a network drive so you always access the same network drive when you start your workstation.

7 Type the local drive and directory where you want Personal Communications to store your private files and other configuration information; then click **Next**.

Your personal files will be stored in the PRIVATE subdirectory of the directory that you specify.

8 Follow the instructions that appear on the screen.

If you want your AUTOEXEC.BAT file modified so you can run applications that use the client APIs supported by Personal Communications, click **Yes**.

If you have installed the communications APIs, you will be asked whether you want to install the IEEE 802.2 interface provided with Personal Communications. If you click **Yes**, detailed instructions and the Network configuration window will appear on the screen.

You will be prompted to restart Windows because some of the Windows settings have changed.

Migrating from Personal Communications for Windows

If a version of Personal Communications for Windows is detected on your workstation during setup, you are prompted to choose whether you want to remove or keep the other version.

Note

We recommend that you stop all Personal Communications sessions and then shut down and restart your workstation before you begin migration.

Remove the Other Version

If you choose to remove the other version of Personal Communications, setup will delete the existing files and then install Personal Communications for Windows 95 in the existing PCOMWIN directory. Your existing workstation profile and other user files in the PRIVATE subdirectory are not deleted and you can migrate them at the end of installation.

WIN.INI and SYSTEM.INI: Personal Communications will remove the Personal Communications directory and various entries in the WIN.INI and SYSTEM.INI files.

CONFIG.SYS: You will need to manually remove some entries in your CONFIG.SYS file. For example, if you were using the IBM LAN Support program, you must delete or remark its device statements. Some examples of those statements are:

```
rem DEVICE=\LSP\DXMA MOD.SYS   1
rem DEVICE=\LSP\DXMC MOD.SYS N ,d8  , , ,
rem DEVICE=\LSP\DXMT MOD.SYS es=5 est=2  s=16 st=16
```

MSDLC Protocol: If you have been using MSDLC to provide IEEE 802.2 LAN support, you must remove it from your Windows 95 Network configuration. MSDLC cannot be used concurrently with the IBM IEEE 802.2 LAN support.

Keep the Other Version

If you choose to keep the other version of Personal Communications, setup will install Personal Communications for Windows 95 so the two versions can coexist. During installation, setup automatically copies your existing workstation profile and other user files to the PRIVATE subdirectory in the Personal Communications for Windows 95 directory. Then you can migrate all the necessary private files at the end of installation.

Migration Utility

Personal Communications for Windows 95 provides a comprehensive set of SNA communications capabilities, collectively called the communications APIs. These APIs allow your workstation to participate fully in a modern communications network that incorporates APPN, which provides many advantages to both users and administrators.

Before you can participate in such a network, your workstation must be uniquely identified; in Personal Communications, you do this by providing the PC Location Name, which consists of the name of the SNA network (NetID) and the name of your workstation (CP name). If you don't know which names to use, obtain them from your network administrator.

The attachment types that require this identification are:

LAN via IEEE 802.2
APPC3270 via LAN
3270 via AS/400 (3270 Passthru) for LAN, SDLC, and Twinaxial interfaces
Synchronous Data Link Control
SNA-over-Async
Twinaxial Data Link Control (APPC)
Dependent LU Requester (DLUR)

If you use an attachment type other than these, type 8 characters in both fields and then click **Next** because Personal Communications will not validate or use this information.

Refer to the *Personal Communications Reference* for more information about migrating specific information from other versions of Personal Communications.

Removing Personal Communications

You can remove the Personal Communications program files, folder items, subdirectories, and registry entries. However, the configuration and other user files in your PRIVATE subdirectory, as well as any corresponding entries in the Startup folder, are not removed.

Removing Personal Communications from a Workstation

To remove Personal Communications from your workstation:

1. From the Start menu, select
   Settings
   Control Panel
2. From the Control Panel window, double-click **Add/Remove Programs**.
3. Select **IBM Personal Communications** and then click **Add/Remove**.
4. Click **Yes** to confirm that you want to delete Personal Communications.
5. Click **OK** until you return to the Control Panel window.

Note

If you plan to reinstall Personal Communications, restart your workstation first.

Removing Personal Communications from a Network Server

To remove Personal Communications from a network server:

1. Make sure no client workstations are using Personal Communications from the server.
2. Shut down and then restart the server to make sure that none of the Personal Communications files are in use.
3. From a Windows 95 workstation attached to the server, select **Run** from the Start menu.
4. In the Run window, type *path*\UNINST and then click **OK**.

After you have removed Personal Communications, UNINST.EXE remains in the Personal Communications directory until you shut down and restart the server.

Installing the Library Reader

This section contains instructions for installing the IBM Library Reader program, which is included with Personal Communications. The Library Reader allows you to view and search the Personal Communications online books.

If you already have the IBM Library Reader installed on your workstation, the installation program will determine if the Reader provided with Personal Communications is newer than the one already installed and update it if necessary.

If you already have IBM BookManager READ for Windows installed on your workstation, you do not need to install the Library Reader program.

To set up the Library Reader for Windows on your workstation:

1. Insert the first Library Reader installation diskette in the diskette drive and then select **Run...** from the Start menu.
2. Type A:\INSTALL in the Run command line (where A is the name of your diskette drive) and then click **OK**.
3. Follow the instructions in the Installation Instructions window.

When installation completes, an icon for the Library Reader will be added to the Start menu. When you click on one of the Personal Communications book icons, the Library Reader will display the book.

Chapter 4. Configuring Sessions

To communicate with a host system or application program successfully, configure a configuration that is compatible with your workstation environment and other attachment information.

Personal Communications saves emulator configuration information to a workstation profile (***.WS**) and SNA information to a configuration file (***.PCG**). Depending on your Personal Communications configuration, you might have a workstation profile only or both a workstation profile and a configuration file. The workstation profile can be used later by other Personal Communications sessions, or to restart this session. The SNA configuration file (*.PCG) is used to initialize the SNA node of Personal Communications.

You can have an icon created for each workstation profile. Then you can select the session icon to establish communication with the host system using the saved workstation profile.

Note

If you configure more than one workstation profile, we strongly recommended that you use the same SNA configuration file for all of them. If you do not use a common SNA configuration file, make sure that there are no conflicts of link names or PU names (for 3270 sessions) between the two configuration files. In addition, the local system information should be the same in the two SNA configurations. Failure to do this might result in unpredictable or inconsistent behavior.

Configuring PC400

To connect PC400 to an AS/400 system, specific configuration information in the workstation profile must correspond to the information specified at the AS/400 system. Refer to Appendix D, “AS/400 Configuration Examples” on page 101 for more information about creating display, line, and controller descriptions on the AS/400 system.

© Copyright IBM Corp. 1989, 1996

Creating a Configuration

To configure a session:

1 From the Start menu, select
Programs
IBM Personal Communications
Start or Configure Session

The logo panel appears. If there is a 3270 Coaxial-cable adapter in your workstation, a message appears to tell you that your workstation will be connected automatically; if there is not, the message tells you that you must configure a connection.

2 Click **OK** to continue.

If you have a coaxial-cable adapter, and if you have a connection to a host system, you will now see an active session screen; if you want to configure another attachment type, click **Configure** from the Communication menu. If you do not have a coaxial-cable adapter, the Customize Communication window appears.

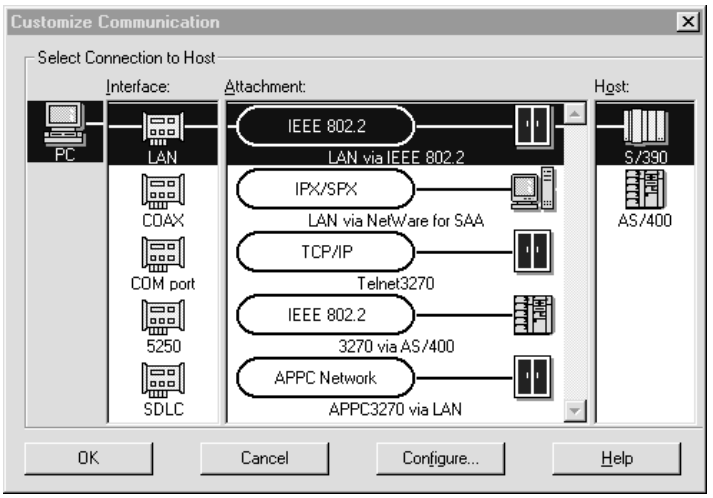

3 If more than one type of host is shown, click on:

S/390 for connections to an S/390 system
AS/400 for connections to an AS/400 system

4 Click on the adapter card interface that you will use; the attachments that can be used with this adapter appear.

5 Click on the attachment type you want to use.

6 Click **Configure**.

The Customize Communication - xxxx Host window appears. (where *xxxxx* represents the host you selected in item 3 on page 28.)

Make your selections for the parameters in this window. Click **Help** to display parameter details.

7 Click **Configure Link**.

If you are configuring a coax, TCP/IP, IPX/SPX, IBM Global Network, Home3270, or one of the Windows NT client attachments on the Customize Communication window, type the required information or select values for the session parameters and then click **OK** until you return to the session window.

Click **Help** to display parameter details.

Save the workstation profile, as described in "Saving a Workstation Profile" on page 30. An SNA configuration file is not required for these configurations.

If you selected any other interfaces or attachment types on the Customize Communication window, type the required information or select values for the session parameters and then click **Next** to continue.

Click **Help** to display parameter details.

When you have finished, click **Finish** and then save the SNA configuration file, as described in "Saving Configuration Information."

Saving Configuration Information

This section describes how to save configuration information. SNA configuration information is stored in a *.PCG file and emulator configuration information is stored in a workstation profile (*.WS).

Saving an SNA Configuration

The Save As window appears automatically after you create or change a configuration with an SNA attachment. To save this information in a configuration file:

1 Type the file name and then click **Save**. The default file type is *.PCG and the default directory is the PRIVATE subdirectory in your Personal Communications directory.

When you save an SNA configuration file, you are also making it the default configuration for the SNA node.

You are returned to the Customize Communication window.

2 Click **OK** until you return to the session window and then save your workstation profile, as described in the next section, "Saving a Workstation Profile."

You can start this configuration in **SNA Node Operations**. Refer to "Starting an SNA Node" on page 72 for more information.

Saving a Workstation Profile

If you save your emulator configuration information, the session will have the same characteristics the next time you start it. If you have an icon added to the Personal Communications folder, you can restart the session with the saved configuration information by clicking on this icon from the Start menu.

To save configuration information in a workstation profile:

1 Click **Save** from the File menu in the session window.

The Save WorkStation Profile as window appears.

2 Type a file name (***.WS**) and then click **OK**. The name you enter will become the icon's title unless you enter a description.

Tip

If you want a longer or more descriptive title, enter the text you want in the **Description** field.

Note that you can choose the directory where this file is saved but the default location is the PRIVATE subdirectory.

3 A message appears that lets you choose to have an icon created.

4 If you selected **Yes**, an icon is created in the folder you specify and you can start the workstation profile by selecting this icon.

If you selected **No**, you can start the session by clicking **Run** from the Start menu and entering:

C:\PERSON~1\PCSWS.EXE C:\PERSON~1\PRIVATE*xxx*.WS

where *xxx*.WS is the workstation profile name.

Note that you must specify all paths and directories. You can type the name of the directory as either PERSON~1 or Personal Communications.

Changing Configuration Information

You can change all of the configuration parameters in the workstation profile and the SNA configuration.

Changing an SNA Configuration

You can change the basic configuration parameters of an SNA configuration from your session window.

To change advanced configuration options or to change which is the default configuration, you need to use SNA Node Configuration.

To change an SNA configuration:

1. Click **Configure** from the Communication menu and then click **Configure** again on the next window.
2. Change the parameters on this window, as necessary. If you want to make additional changes, click **Configure Link**.

   Your default configuration file should be opened automatically. If you want to change a different configuration, click **Existing**.
3. Make your changes and then click **Next**.

   An error message will appear if you make changes to the following parameters:

   Link Station Name
   NetID of the System Location Name

   If this occurs, click **Back** and then click **New**.
4. Now you can proceed through the windows and make additional changes, if necessary.
5. Click **Finish** when you are done.
6. If you want to replace the existing configuration, click **Yes** to overwrite it. If you want to create a new configuration that is based on the existing one, type a new file name; however, you must use SNA Node Configuration to make a new configuration the default configuration.
7. Click **OK** until you return to the session window.

Changing a Workstation Profile

To change a workstation profile:

1 If your session window is not active, select the icon corresponding to the workstation profile to be changed.

The session window appears.

2 Click **Configure** from the Communication menu.

The subsequent steps are the same as for creating a new configuration, beginning with step 3 on page 28.

3 After you have made your changes, the following message appears:

> Because you have changed the configuration,
> communication will be terminated if you
> proceed. Are you sure?

If you click **OK**, communication ends, but then you are reconnected using the new configuration information.

To save the changes in your workstation profile, click **Save** from the File menu in the session window and then click **Yes** to replace the existing file. Otherwise, click **No** to save this information in a new configuration file.

Tip

Unless you have unchecked **Save on Exit** from the File menu, changes are saved to the workstation profile automatically whenever you exit a session.

Chapter 5. Starting and Stopping Emulator Sessions

This chapter describes how to start and stop single and multiple emulator sessions.

If your emulator configuration information was saved, as described in “Saving Configuration Information” on page 29, it is stored in a workstation profile (***.WS**). If you have a session icon, you can select it to start a session, using the saved configuration information.

Note

If you are a first-time user of Personal Communications, or there are no session icons in your Personal Communications folder, refer to Chapter 4 , to create a configuration.

Starting Sessions

You can use the following methods to start sessions:

Select an already-configured session icon from the Explorer or from the Start menu

Start from an existing session window

Specify a workstation profile name in the Run window on the Start menu. For example:

```
C:\PERSON~1\PCSWS.EXE  C:\PERSON~1\PRIVATE\MY.WS
```

Start multiple sessions with a batch file

When you start multiple sessions, the titles of session windows are Session A, Session B, and so on, unless you’ve customized them.

© Copyright IBM Corp. 1989, 1996

Starting by Selecting the Session Icon

To start a session, select the **Session** icon from the Explorer or from the Personal Communications folder on the Start menu. (This icon has the same name as the workstation profile if you did not specify a description for it.)

The session starts.

Starting from a Session Window

Use the following methods to start from an existing session window:

Start another session using the same workstation profile
Start another session using another workstation profile
Start a different type of session using the same session window

Starting Another Session Using the Same Profile:

Select **Run the Same** from the File menu. Another session starts, using the same profile.

Starting Another Session Using a Different Profile

1. Select **Run Other** from the File menu.

   The Open Other Workstation Profile window appears.

2. Double-click the desired workstation profile in the **File Name** list.

3. Select **OK**.

   Another session starts, using the profile specified in step 2.

Starting a Different Type of Session from a Session Window

1. Select **Open** from the File menu.

2. Specify the desired workstation profile and then select **OK**.

   The current session ends and then another session starts, using the selected profile.

Starting a Workstation Profile from the Run Command Line

To start the session:

1. Select **Run** from the Start menu on the taskbar.
2. Type the following command in the **Command Line** field and then select **OK**.

   C:\PERSON~1\PCSWS.EXE C:\PERSON~1\PRIVATE*MY.WS*

   where *MY.WS* is the workstation profile stored in the C:\PERSON~1\PRIVATE directory.

The session starts, using the specified workstation profile.

Starting Multiple Sessions

You can use the batch program, which runs batch files (*.BCH), to start two or more workstation profiles at the same time. Personal Communications batch files can also start other programs when you include their startup commands. This is especially useful if you always want to start an application when you start a session. For example, you might want to start an application, such as ZipPrint, that uses a Personal Communications API.

If you created an icon for your batch file, you can start workstation profiles and other programs in the batch file just by selecting the icon.

Creating a Batch File

To create a batch file:

1 From the Start menu, select the **Multiple Sessions** icon.

The Create/Modify Batch File window appears.

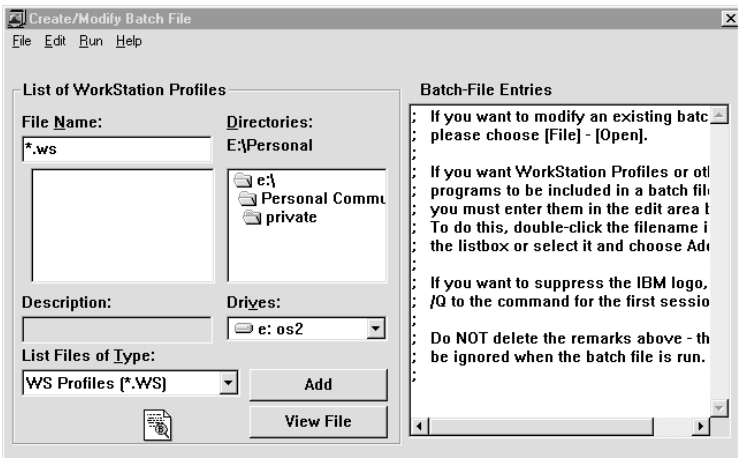

2 There are four methods for including profiles or programs in a batch file. Use the method you prefer:

Double-click the file names in the **File Name** list box.

Drag and drop the file names with the right mouse button from the **File Name** box to **Batch-File Entries**.

Select a file name from the **File Name** list box and then select **Add**.

Type the complete path and command file name in the edit area.

Personal Communications places the full path and command that is needed to run the workstation profile or other program above the cursor line in the edit area. If there is no cursor, the command will be added to the last line.

To see the contents of the profile you added to the batch file, click it in the **File Name** list box and then click **View File** or the magnifying glass.

Note

Some brief instructions appear at the top of **Batch-File Entries**; you need not remove them because they do not affect the running of the batch file.

3 Repeat step 2 for each subsequent file to be added.

PCSWS.EXE Options

To suppress the IBM logo when you start one or more sessions, add the parameter **/Q** to the first command in the batch file:

C:\PERSON~1\PCSWS.EXE C:\PERSON~1\PRIVATE\TCPIP1.WS **/Q**

To start a session as an icon, not as a window, add the parameter **/I** to the command in the batch file:

C:\PERSON~1\PCSWS.EXE C:\PERSON~1\PRIVATE\TWINAX.WS **/I**

To start a session with a specific short session ID, insert the parameter **/S=***m* after PCSWS.EXE in the batch file:

C:\PERSON~1\PCSWS.EXE **/S=***m* C:\PERSON~1\PRIVATE*LAN1*.WS

where *m* is the short session ID.

Note: If you use the /S option to assign A as the short session ID, you should use this option for all of the sessions in the batch file. Otherwise, if another session starts first, it becomes the A Session and the session with the /S=a option will not start because of the conflicting short session IDs. Another way to prevent conflicts is to assign a character later in the alphabet for the short session ID.

4 When you complete the edit, save the created batch file by selecting **Save** from the File menu.

The Save Batch File As window appears.

5 Enter a name for the batch file (***.BCH**).

The name you enter is used as the icon title, unless you enter a description as well.

6 Select **OK** to continue.

7 Select **Yes** if you want to create an icon for the batch file.

The Personal Communications window appears.

8 Specify the program folder to which the batch file icon is to be added and then select **OK**.

A message appears, asking you to save the batch file.

9 Select **OK**.

The batch file icon appears in the specified program group.

Starting Emulator Sessions

The following two examples are of batch files that sequentially run four workstation profiles, saved in the C:\PERSON~1\PRIVATE directory, and then run **MYAPP.EXE**.

Sample PC/3270 Batch File

```
C:\PERSON~1\PCSWS.EXE C:\PERSON~1\PRIVATE\COAX1.WS /Q
C:\PERSON~1\PCSWS.EXE C:\PERSON~1\PRIVATE\COAX2.WS /I
C:\PERSON~1\PCSWS.EXE C:\PERSON~1\PRIVATE\SLAN1.WS
C:\PERSON~1\PCSWS.EXE C:\PERSON~1\PRIVATE\SLAN2.WS
C:\APPL\MYAPP.EXE
```

Sample PC400 Batch File

```
C:\PERSON~1\PCSWS.EXE C:\PERSON~1\PRIVATE\AS4X1.WS /Q
C:\PERSON~1\PCSWS.EXE C:\PERSON~1\PRIVATE\AS4X1.WS /I
C:\PERSON~1\PCSWS.EXE C:\PERSON~1\PRIVATE\AS4Y1.WS
C:\PERSON~1\PCSWS.EXE C:\PERSON~1\PRIVATE\AS4Y1.WS
C:\APPL\MYAPP.EXE
```

Using a Batch File

You can use one of the following methods to run a batch file:

Select a batch file icon from the Explorer or from the Start menu.

Run the batch file from the Run command line:

```
[drive]:\[path]\PCSBAT.EXE  [drive]:\[path]\xxxx.BCH  /R
```

Note: To run a batch file, specify the /**R** option.

Select the **Multiple Sessions** icon from the Start menu.

1. Select **Open** from the File menu in the Create/Modify Batch File window.
2. Select the desired batch file and then select **OK**.

   The contents of the batch file appears in the edit area.
3. Select **Run** from the Run menu.

Editing an Existing Batch File

To edit an existing batch file:

1. Select the **Multiple Sessions** icon from the Start menu.

   The Create/Modify Batch File window appears.

2. Select **Open** from the File menu.

   The Open Batch File window appears.

3. Select the batch file you want to edit and then select **OK**.

   The contents of the batch file you selected appear in the edit area of the Create/Modify Batch File window.

4. Edit the batch file. Refer to step 2 on page 36 for more details.

   Refer to the online help for details about the menu bar Edit functions. Select **Index** from the Help menu and then click **Menu-Bar Commands of the Batch-Program Window**.

5. When you complete the edit, save your changes by selecting **Save** or **Save As** from the File menu.

   Select **Save** to save your changes in the existing file.
   Select **Save As** to save your changes in a new file and then continue with step 5 on page 37.

6. Exit the Create/Modify window.

Starting Multiple Sessions without a Batch File

To start multiple sessions without a batch file:

1. Select the icon for the session you want to start first from the Start menu.

2. After it connects to the host, select one of the following choices from the File menu:

   Run the Same... to start another session with the same configuration.

   Run Other... to start a session with a different configuration.

   When the Open Other Workstation window appears, select the profile you want to start and then click **OK**.

Automatically Starting Sessions

To start one or more sessions automatically when Windows starts:

1. From the Start menu, select
   Settings
   Taskbar
2. Click the **Start Menu Programs** tab and then click **Add**.
3. Click **Browse** and then open the PRIVATE subdirectory in the Personal Communications directory.
4. Change the file type to All Files.
5. Double-click the session icon or the batch icon.
6. Click **Next** and then double-click the Startup folder.
7. Accept the icon name or type a new one.
8. Click **Finish** and then **OK** when you are done.

Stopping Sessions

To stop a session, click the **X** in the upper right corner or double-click the upper left corner of the session window, or select **Exit** from the File menu.

To stop multiple sessions at the same time, select **Exit All** from the File menu. All emulator sessions end, and the associated session windows are closed.

Stopping Emulator Sessions

Before Stopping a Session

If you perform this operation while a host application program is running, your session stops and you lose your connection to the program. Therefore, make sure you exit any host application programs and stop active SNA links before you exit the session. Refer to "Stopping an SNA Node" on page 73 for more information about SNA Node Operations and stopping an active SNA link.

By default, changes to your current workstation profile are saved when you exit the session.

Chapter 6. Using Emulator Sessions

This chapter describes how to use the printing, editing, and file transfer functions in an emulator session. It also describes the choices on the Appearance, Assist, and Window menus in the emulator session windows.

Printing

You can use Personal Communications to print from display or printer sessions.

From display sessions, print all (**Print Screen**) or part (**Trim Print**) of the screen of your session window on a workstation printer.

To print only part of the session window, drag the mouse to create a trimming rectangle around the part of the window you want to print and then select **Print Screen** from the File menu.

From printer sessions, direct printing from an S/390 or AS/400 to a workstation printer.

Configure a printer session to designate a workstation printer as a system printer that will use either the printer definition tables (PDTs) provided with Personal Communications or the Windows printer drivers. Refer to the online help for more information.

You can select either PDT files or Windows printer drivers that Personal Communications can use

To print files based on printer control information, such as control codes and the printer output format, defined in the PDT.

To print files based on printer setup parameters, such as paper size and form type, that you define in **Printer Setup**.

For more information about printing, refer to the *Personal Communications Reference*.

© Copyright IBM Corp. 1989, 1996

Setting Up the Printer

To set up a printer for a printer session, and to set up the *Print Screen* function for the display session, specify information for each printer driver:

1. Select **Printer Setup** from the File menu
2. When the Printer Setup window appears, refer to the online help for information about the printer settings.

   These settings are available only when using the Windows printer drivers.

   Personal Communications prints with the Windows printer drivers or with the printer definition table (PDT) files it provides.
3. Select **OK** after completing setup.

You can set the current printer to use either the Windows printer driver or a PDT file.

Using the Windows Printer Driver

To set up your printer to use the Windows printer driver:

1. Select **Printer Setup** from the File menu of the session window.

   The Printer Setup window lists the supported printers.
2. Select the printer driver to be used from the **Printer** list box.
3. Confirm that the **Use PDT file** check box is not selected and then select **OK**.

   Personal Communications will now use the printer driver you selected and the Printer Setup window is closed.

Using PDT Files

PDT files define the transfer of characters and control codes to a printer, and the printer output format. If the printer definition table (PDT) file is used, the Windows printer driver is not used. Instead, Personal Communications generates print outputs based on printer control information defined in the PDT file.

Refer to the *Personal Communications Reference* for more information about PDT files.

To use PDT files:

1. Select **Printer Setup** from the File menu of the session window.

   The Printer Setup window appears.

2 Select the port to be used from the **Printer** list box.

Selected PDT files are available for the port selected here.

3 Select **Setup** and then specify the paper size of the selected printer driver.

4 Select the **Use PDT file** check box and then select **Select PDT**.

The Select PDT file window appears.

5 To use the existing PDT file, select a PDT file to be used and then select **OK**.

To use a PDF file converted to a PDT file:

a. Select **Convert PDF**.

b. Select a PDF file to be converted from the list in the Convert PDF to PDT window and then select **Convert**.

The PDF File Converter window displays the result of PDF conversion. If there are any errors during the conversion, they are listed in the window.

c. When you select **Save List**, the window list is saved in **.LST** file in the **PDFPDT** subdirectory.

To close without saving the list, select **Close**.

After the file is converted, control returns to the Select PDT file window and the converted PDT file appears in the list.

d. Select the PDT file and then select **OK**.

6 When the Printer Setup window appears, select **OK**.

After the printer is set, the Printer Setup window is closed.

ZipPrint (PC/3270 Only)

Use ZipPrint to print PROFS or OfficeVision notes, calendars, OV documents, CMS files, XEDIT workspaces, and 3270 session screens.

Preparing to Use ZipPrint

Before you can use ZipPrint, DDE/HLLAPI must be enabled for the sessions. To do this, select **API Settings** from the File menu and refer to the online help for detailed instructions. DDE/HLLAPI is enabled by default.

Note

By default, PROFS-oriented functions of ZipPrint are U.S. English PROFS. You can customize it for other languages.

Starting ZipPrint

Start ZipPrint before you start any display sessions. The ZipPrint menu is added to the menu bar of the specified session window; then you can use it from the menu bar the same as with the other functions.

Start ZipPrint by selecting the **ZipPrint** icon in the Personal Communications program folder. This starts ZipPrint for Session A only.

For more information about ZipPrint, including information about using ZipPrint for additional emulator sessions, search for ZipPrint in Help.

Using ZipPrint

Keep the following consideration in mind when using ZipPrint:

ZipPrint uses the Personal Communications File-Transfer function to print VM/CMS notes and files. On slower communication lines such as SDLC, Async (IIN), or Home3270 attachment, or when using a large packet or block size, you might experience a file-transfer timeout. If this happens, you should increase the *timeout delay* as follows:

1. Select **Transfer** from the menu bar of the session window.
2. Select **Setup - Miscellaneous Setting**.
3. Increase the timeout value to 150.

Editing

You can edit the contents of your session window using the Windows clipboard and the Edit menu.

Undo

Cancels the most recent Edit operation, except for Copy Link, and restores the contents of the session window and the clipboard accordingly.

Cut
Copies the marked area into the clipboard and removes it from the display session window.

Copy
Copies (or duplicates) the marked area into the clipboard without removing it from the display session window.

Copy Append
Copies the marked area into the clipboard without removing it from the display session window. If there is already data in the clipboard, Copy Append adds the new data to it.

Paste
Overlays the current contents of the clipboard into the session window, starting at the current cursor position.

Paste Next
If the contents of the clipboard are larger than the presentation space (session window), Paste Next allows you to paste the clipboard contents in consecutive parts into the session window, starting at the current cursor position.

Clear
Removes the marked area of the session window. The clipboard contents are not altered.

Copy Link
Supports the DDE Copy Link function. To start a link between Personal Communications and another application program, mark an area of the session window, select **Copy Link**, and then select **Paste Link** in the other application program.

Note: The command you should use for PasteLink or PasteSpecial depends on the application program you are using.

Unmark
Removes the clipping (or marking) rectangle. The session window and the clipboard contents are not altered.

Select All
Marks the entire session window.

Editing by Linking to Windows Application Programs

Linking to Windows application programs supporting **PasteLink** lets you paste session-window data to the windows of those application programs. You can run **CopyLink** when DDE/EHLLAPI is usable.

Confirming the DDE/EHLLAPI Settings

To check whether DDE/HLLAPI is currently set to usable status:

1. Select **API Settings** from the File menu.

   The API Settings window appears.

2. Make sure the **DDE/EHLLAPI** check box is selected.

   If the box is checked, DDE/EHLLAPI is set to usable status. Continue to step 4.

3. If the box is not checked:
   a. Click the **DDE/EHLLAPI** check box and then click **OK**.
   b. Stop and then start your session to enable the new settings.

4. If DDE/EHLLAPI was already set to usable status, select **OK**.

Using CopyLink and PasteLink

To use **CopyLink** and **PasteLink**:

1. Mark the session window area for which **CopyLink** should be issued.

2. Select **CopyLink** from the Edit menu.

   If the session window is already linked with an OS/2 or Windows application program, **CopyLink** appears in gray and cannot be selected. In this case, force the application program to end the linkage, or stop the application program. Then you can select **CopyLink**.

3. Start the Windows application program for the window to which an area should be copied.

4. Specify the location for which **PasteLink** should be run.

5. Issue **PasteLink** or **PasteSpecial** by using the menu for the application program.

   The contents of the marked area are pasted into the specified location in the window of the application program.

   CopyLink is now completed.

When the contents of the marked area in the session window are updated during linking, the contents of the area pasted to the window of the linked application program are also updated.

Copying Table Data to a Spreadsheet

You can use the **Cut**, **Copy**, **CopyLink**, or **CopyAppend** choices in the Edit menu to copy data in the session window to the window of a Windows spreadsheet application program.

To use **Copy**, select the **Paste** or **PasteLink** choice in the application program window into which data is to be copied.

Data in the marked area can be copied in the following three data formats, depending on the format supported by the spreadsheet for the window to which data is to be copied:

Sylk format Data format for general-purpose spreadsheets, such as Multiplan**

Biff3 format Data format for Microsoft** Excel**

Wk3 format Data format for Lotus** 1-2-3**

Note

Whether application programs, such as Excel or Lotus 1-2-3, also support these data formats in subsequent versions depends on individual application program specifications.

Individual items of data in tables of the session window are divided automatically such that they are suitable for spreadsheets, and they are copied into individual cells of tables in the application program.

Copying Marked Data without Dividing It into Cells

To paste data in the marked area per line, without dividing it into individual cells, add the following lines to the workstation profile:

```
[Edit]
Sylk=N          (If Sylk format data is not divided into cells)
Biff3=N         (If Biff3 format data is not divided into cells)
Wk3=N           (If Wk3 format data is not divided into cells)
```

Copying Lines Containing Only Operational Signs

If data in the marked area contains signs, such as +, –, =, or |, the signs are regarded as being ruled lines of the table. Once they are removed, only numeric data is copied.

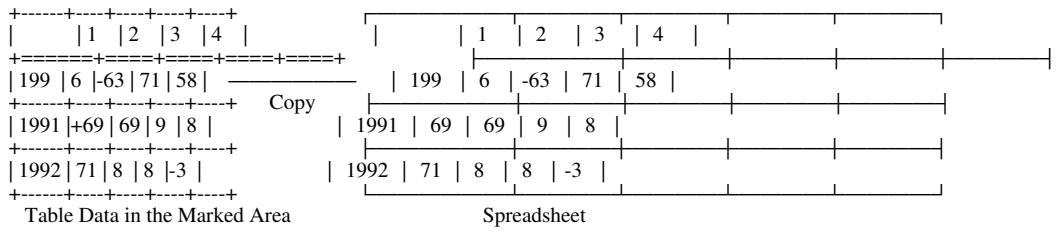

To copy these signs without replacing them with null characters, add the following lines to the workstation profile:

```
[Edit]
MaskGridCharacter=N
```

Copying Data in Cells As Text Data

Data in the marked area is treated as numeric data by default. Therefore, currency signs, such as $, and punctuation marks, such as commas, are removed before copying. To copy data containing such signs and marks as text data rather than numeric data, add the following lines to the workstation profile:

```
[Edit]
ConvertToNumeric=N
```

Data in the marked area containing signs and marks is then copied as text data. In addition, all numeric data that does not contain signs and marks is also copied as text data.

Getting Help

For information about all the tasks you can perform with the Edit menu choices, as well as how to mark and then edit an area within the window, refer to the online help:

1. Select **Index** from the Help menu.
2. When the help window displays, select **Menu Bar Commands of the Workstation Window**.
3. Select **Edit** from the list of Menu Bar Commands.

Restrictions with Home3270 Attachment

When you use the Home3270 attachment, the following edit functions are restricted:

Undo function

You cannot perform the Undo function after using the Cut, Paste, PasteNext, or Clear functions because these functions modify display areas in the protocol converter.

Cut and Clear functions

When an area to be cut or cleared contains a field attribute character or protected field, or each line in that area ends at the end of an unprotected field, the following things might occur:

Characters in an unprotected field outside the area to be cut or cleared might also be cleared.

An alarm might sound.

The cursor might not appear at the initial position.

When you perform the Cut or Clear function, specify only the minimum area required (for example, some words or one field in one line), and then confirm that the frame exists in an unprotected field.

Paste and PasteNext functions

When the area to be pasted contains a field attribute character or protected field, or the end of the paste area on each line is at the end of an unprotected field, the following things might occur:

The character to be pasted might not be written to the expected position.

An alarm might sound.

The cursor might not appear at the initial position.

When you use the paste function, paste the shortest character string possible (for example, a character string, but excluding CR/LF). Confirm that the area to be pasted is in an unprotected field.

Transferring Files

Personal Communications File Transfer enables the transfer of one or more files between a host system and workstation. You can define file transfer options in advance to help you transfer a variety of files quickly and easily.

File Transfer is quite different from the PC400 function, Data Transfer, which is described on page 65 . The main differences are listed here:

Transferring Files

Type of Transfer	Products required on an AS/400 system	Access Method	Sending and receiving unit	Type of connection to an AS/400 system
File Transfer	Personal Communications Tools (APVAFILE)	Transfer menu in session window	Entire file	Display session
Data Transfer	PC Support/400 V2R2 or V2R3 or OS/400 V3R1 or later[1]	Data Transfer in the Emulator Utilities folder	Field, record, or file in a database	SNA connection (with or without a display session)
OS/400 provides the host transaction program for Data Transfer.				

With Personal Communications, you can perform the following file transfer functions:

Send files to the host system
Send files using the Transfer menu or, from 3270 sessions, the SEND command from the DOS prompt.

You can also send files by using an HLLAPI or DDE application or a macro that invokes file transfer.

Receive files from the host system
Receive files using the Transfer menu or, from 3270 sessions, the RECEIVE command from the DOS prompt.

You can also receive files by using an HLLAPI or DDE application or a macro that invokes file transfer.

Create, test, replace, and delete templates
Create a template to have Personal Communications automatically generate a workstation or host file name and transfer type when you select a file to be sent or received.

Define transfer types
Define up to 16 transfer types for each host system. Text, binary, and append (except for CICS) are initially set as transfer types.

Select, create, and customize translation tables
Select translation tables to define which translation table is used during file transfer.

Import or export files (PC/3270 only)
Import/Export is an office system communication program and an application program run on the IBM Customer Information Control System (CICS). The import/export function makes it possible to import or export Final Form Text (FFT), Revisable Form Text (RFT), and PC documents.

When you export a file, your workstation receives the file you exported and an interchange document profile (IDP) file. Before you can import a file to your workstation, you need to create an IDP file with transmission information.

Create interactive document profile (IDP) files (PC/3270 only)

An IDP file contains document header information, has the same name as the file to be transferred, and has the extension .IDP.

To create an IDP file, select **Setup** from the Transfer menu.

Host Requirements

Before you can send or receive files one of the following file transfer programs must be installed on the host system.

IBM 3270-PC File Transfer Program, 5665-311 (MVS/TSO)
IBM 3270-PC File Transfer Program, 5664-281 (VM/SP)
IBM 3270-PC File Transfer Program, 5798-DQH (CICS/MVS)
Personal Communications Tools Program Package (APVAFILE)

- 1/4-inch tape 85G9969
- 1/2-inch tape 85G9973
- 8-mm tape 46H8353

Getting Help

For more information about transferring files, refer to the online help:

1. Select **Procedures** from the Help menu.
2. When the help window displays, scroll down to **Transferring Files**.
3. Select choices from that list for detailed information.

Setting Up a Session Window's Appearance

You can use the following functions from the Appearance menu to define the appearance of your session window:

Display Setup

Customize a variety of characteristics, such as the cursor, pointer, rule line, and trimming styles, graphics, sound, and color palette, in the display session.

Color Mapping

Set the colors used in session windows.

Font

Choose the font to use for display session windows, the style, and whether it will be an automatic sizing font or a fixed size font. If you use a fixed

size font, you can also choose its size. The set of fonts from which you can choose depends on the type of display you are using.

Note: You cannot change the font size when the session window is maximized.

Window Setup
Change the appearance and title of the session window and change the session icon.

Tool Bar
Add, delete, move, copy, and rearrange buttons on the tool bar. You can also add or delete titles for each tool bar item.

The settings are stored in a *.BAR file.

Tool Bar Setup

The tool bar displays under the menu bar in your session window to allow quick access to the Personal Communications functions, commands, and defined macros.

Use the tool bar pop-up menu to quickly and easily create, edit, and delete tool bar items, as well as to save and load customized tool bars. When you customize the tool bar, you can change the order of items, add and delete items, change the function, title, or graphic associated with any item, change the fonts, colors, and other tool bar visual style elements.

To customize your tool bar, select **Tool Bar** from the Appearance menu, or display the Tool Bar pop-up menu by clicking on the right mouse button while pointing at any part of the tool bar.

For information about customizing the tool bar, refer to the online help from the Tool Bar Setup window.

If you want to hide the tool bar, refer to “Showing or Hiding the Menu Bar and Tool Bar” on page 55.

Showing or Hiding the Menu Bar and Tool Bar

You can show or hide the menu bar or tool bar. To do this:

1. Click the upper left corner of the session window to display the system menu.

   Hide Menu Bar appears when the menu bar is shown

   Show Menu Bar appears when the menu bar is not shown

   Hide Tool Bar appears when the tool bar is shown

   Show Tool Bar appears when the tool bar is not shown

2. To hide either the menu bar or tool bar, select **Hide Menu Bar** or **Hide Tool Bar**.

3. To show either the menu bar or tool bar, select **Show Menu Bar** or **Show Tool Bar**.

   If you hide the menu bar, the Popup Menu Bar choice is added to the system menu. The Popup Menu Bar shows a cascading menu that contains all commands in the hidden menu bar.

Getting Help

If you're not sure how to set the session window's appearance options, view the detailed instructions in the help.

1. Select **Procedures** from the Help menu.

2. When the help window appears, search for appearance or scroll down to **Changing the Screen Appearance**.

   Select choices from that list for detailed information.

Setting Up and Using the Assist Functions

Personal Communications provides auxiliary functions that let you operate the system more efficiently. You can use the following functions from the Assist menu of the session window.

- Keyboard and macro functions
- Hotspots setup
- Keyboard setup
- Popup keypad setup
- Mouse setup
- Macro functions

This chapter describes these auxiliary functions, and explains how to set up and use them.

Keyboard and Macro Functions

A Keyboard/Macro Function command lets you run macros or Personal Communications-supplied key functions without using the keyboard. Run the macros or key functions from the current cursor position in the session window.

Macro Functions

A macro is a sequence of key or mouse actions and host commands that you can perform with a single action, such as a keystroke. Before you can use a macro function, you need to define it. For more information, see “Macro Setup” on page 61.

Key Functions

Personal Communications provides many key functions that can be assigned to the keys on the keyboard, the mouse buttons, or the buttons of the pop-up keypad. You can also use them to generate macros.

Hotspots Setup

A *hotspot* is an area of the session window on which you can double-click the left mouse button to perform a command or function. You do not need to use the keyboard. For example, you can double-click a PF key number to perform the PF key function.

3D Hotspots

Select **Show hotspots** to get 3D hotspots; these only require a single click, and they stand out on your screen.

You can define the following actions in a hotspot:

Simulate function keys

Play a macro that has the same name as the character string you select on the session window

Enter the selected string at the cursor position

Simulate the Enter key at the cursor position

Using Hotspots

Note

You must have a mouse to use hotspots.

To use a hotspot:

1. Move the mouse pointer to the hotspot displayed in the session window.
2. Double-click the left button of the mouse, except for 3D hotspots, which only require a single click.

   Personal Communications determines whether you have specified a hotspot function that matches what appears at the position of the mouse pointer. If so, it processes the hotspot. When two or more hotspots are specified for a single character string, the *first retrieved hotspot* is processed.

   Hotspots are retrieved in the following order:

   (1) PFnn, FPnn, Fnn, nn
   (2) Point-and-select (run the macro)
   (3) Point-and-select (enter the selected string)
   (4) Point-and-select (enter at the cursor position)

Keyboard Setup

You can use Keyboard Setup to modify the function defined for each key on the keyboard, except some reserved keys.

You can define the following functions for the keys.

Performing a key function
Playing a macro
Entering characters

Note: By default, the Enter function is assigned to the Ctrl key. To change this assignment or, if you are using a non-IBM compatible keyboard and the Enter key does not work properly, you need to customize your keyboard.

Keyboard File

When you specify a key, you can save the new keyboard layout in a file (.KMP). If you create two or more keyboard files, you can alternate between them as required.

To assign a function to a key on the keyboard:

1. Select **Keyboard Setup** from the Assist menu or click the map icon on the tool bar.
2. When the Keyboard Setup window appears, select **Customize**.
3. Assign the key functions, referring to the online help for detailed instructions. Make sure you click **Change** each time you change a key.
4. Save your changes and exit the Customize Keyboard window.
5. Select **OK** after completing the setup.

You can reset either the entire keyboard or specific keys to defaults.

To reset the entire keyboard, set the current keyboard to **IBM Default** in the Keyboard Setup window.

To reset specific keys, select a key in the Customize Keyboard window and then select **Default** from the Current Actions for Selected Key box.

Note: There are 5 keys that you cannot redefine and they are gray in Keyboard Setup; these keys are: Alt, AltGrp, Print Screen, Scroll Lock, and CapsLock.

Pop-Up Keypad Setup

The pop-up keypad is a small window in which some buttons are arranged. To display the pop-up keypad, put the pointer anywhere in the session window and press the right mouse button.

You can allocate the following functions to these buttons:

A standard key function provided by Personal Communications
A user-specified macro
A character entry

To perform these functions, you only need to click a button on the pop-up keypad with the left mouse button.

To view the description of a short-name key function or macro, click the right mouse button while pointing at one of the function or macro names.

Pop-Up Keypad File

You can specify the number of buttons displayed in the pop-up keypad, the functions allocated to those buttons, and colors of the buttons. You can save the specified pop-up keypad contents in a pop-up keypad file (also referred to as a *poppad* file).

A pop-up keypad file (***.PMP**) contains the information for the number of buttons displayed in the pop-up keypad, the functions allocated to those buttons, and color information. You can define which pop-up keypad file is allocated to the pop-up keypad.

Using the Pop-Up Keypad

To use a pop-up keypad:

1. With the mouse pointer anywhere in the session window, click the right mouse button.
2. Select **Pad 1, Pad 2, Pad 3**, or **Pad 4**.
3. Click the required button in the pop-up keypad.

To set up the pop-up keypad:

1. Select **Popup Keypad Setup** from the Assist menu.
2. When the *Popup Keypad Setup* window appears, set the required items, referring to the online help for detailed instructions.

If you want to edit the pop-up keypad file, select **Customize** and then make your changes.

3 Select **OK**. The pop-up keypad you selected is ready for use.

Mouse Setup

The **Mouse Setup** command lets you allocate functions to the right and left buttons of the mouse; this enables you to perform the following actions without having to use the keyboard:

Running the Personal Communications-supplied key functions
Running the user-defined macros
Running character strings

Mouse File

You can save the functions defined for the mouse buttons in a mouse file (***.MMP**). You can create two or more mouse files and switch between them as required.

To set up the mouse and assign functions to the mouse buttons:

1 Select **Mouse Setup** from the Assist menu.

The current settings appear in the Mouse Setup window.

2 Set up the required items, referring to the online help for detailed instructions.

If you want to create or edit a mouse file:

a. Select **Customize**.

b. When the Customize Mouse window appears, allocate functions to the right and left buttons of the mouse. These appear in **Current Action for Mouse Button**.

c. Select the required functions from **List of Key Actions**.

d. Save your changes and then select **OK**.

3 Select **OK**.

The mouse setup is complete.

Macro Setup

A macro is a sequence of key or mouse actions and host commands that you can perform with a single action, such as a keystroke. You can edit an existing macro or create a new macro by selecting **Macro Setup** from the Assist menu.

Using a Macro

You can use a macro in various ways. Table 2 lists examples of how you can set up and then use macros.

Table 2. Macro Use Examples and Settings

If you want to...	Do this...
Automatically play a macro when your session starts.	Set an **Auto-Start Macro**.
Play a macro while attached to a host application.	**Start Macro Play**.
Play a macro with the keyboard or macro function.	Use the **Keyboard/Macro Function**.
Click on a hotspot to play a macro.	Set a **Hotspot**.
Assign the macro to a pop-up keypad button.	Customize the **Pop-Up Keypad** file.
Press the mouse button to play a macro.	Customize a **Mouse** file.
Press a key on the keyboard to play a macro.	Customize a **Keyboard** file.

Creating a Macro

You can create a macro manually or by recording some of your interactions with the host system, such as your logon procedure.

To create a macro manually:

1. Select **Macro Setup** from the Assist menu.
2. When the Macro Setup window appears, select **Customize**.
3. When the Customize Macro window appears, edit the macro. You can type statements directly or select functions, characters, or even other macros, from the list of Key Actions at the top of the session window.

   Refer to the online help for detailed information.
4. Click **OK** to save the macro file.

Macro Statements

You can use the following statements when you create a macro:

Key function
Use Personal Communications-supplied key functions

Macro
Define a macro within another macro but you cannot create a macro in a permanent loop where the first macro is repeatedly called at the end of the macros.

Character
Use any characters in the **Character** list in the Customized Macro window.

Character string
Use character strings you can type from the keyboard. You must use a double quotation mark (“) at the beginning of the character string.

Wait condition
Specify wait conditions to stop the process until the specified time has elapsed or the status satisfying the specified condition occurs.

Tokens
You can use tokens, such as goto and run, to add logic.

Setting Up a Macro to Autostart

To set up a macro to autostart:

1. Select **Macro Setup** from the Assist menu.

   The Macro Setup window appears.

2. Set a macro to auto-start when your workstation starts.

3. Refer to the online help for detailed instructions and then select **OK** after completing your setup.

Recording and Playing Macros

To start macro recording, select **Start Recording Macro** from the Assist menu, type the macro name, and then select **OK**.

To quit macro recording, **Cancel Recording Macro** from the Assist menu. The recording operation is canceled, and the macro is not saved.

To pause macro recording, select **Pause Recording Macro** from the Assist menu. The recording operation stops. To restart recording, select **Resume Recording Macro**.

To stop macro recording, select **Stop Recording Macro** from the Assist menu. Recording ends and the macro is saved in a specified file.

To start macro playing, select **Start Playing Macro** from the Assist menu, select the macro and then select **OK**. The selected macro starts to play.

To stop macro playing, select **Quit Playing Macro** from the Assist menu. The macro playing stops.

Managing Emulator Sessions

Personal Communications provides the following functions, in addition to those provided by Windows, for those who work with several open session windows simultaneously. These functions allow you to manage your session windows easily and quickly.

Jump

Use **Jump** to switch between the currently opened session windows.

You cannot use Jump to switch to a session window that is currently hidden. Instead, select **Show** from the Window menu to display the session window on the screen. Then, select **Jump**.

Hide

Use **Hide** to stop displaying a visible session window.

You cannot hide all sessions. At least one session is always shown.

Note: Windows hidden with **Hide** are not displayed

Show

Use **Show** to display a session window that was previously hidden with **Hide**.

View

Use **View** to display a previously-saved arrangement of windows, or to save an arrangement of windows.

Personal Communications can save and restore the following information relating to the session window view:

Position and size of each window
Window status (standard, minimized, or maximized)
Window font

You can save view information for up to eight windows.

Getting Help

For more information about managing session windows, refer to the online help:

1. Select **Procedures** from the Help menu.
2. When the help window appears, scroll down to **Managing Workstation Windows**.

   Select choices from that list for detailed information.

Chapter 7. AS/400 Utilities

PC400 provides the following AS/400 utilities:

Data Transfer
Transfer data from the AS/400 system to your workstation, or from your workstation to the AS/400 system. (Record-level data transfer).

PC Organizer
Run Windows applications from a 5250 display session.

Text Assist
Use Text Assist to create or edit a document or short messages.

Data Transfer (PC400 Only)

PC400 Data Transfer enables you to transfer data between an AS/400 system and your workstation. To use the Data Transfer function, select the **Data Transfer** icon.

Transferring data is quite different from transferring files, which is described in "Transferring Files" on page 51 .

Requirements

Before you can transfer data with PC400:

You must have an SNA connection to an AS/400 system.

IBM PC Support/400 (5738-PC1) must be installed on your AS/400 system, unless IBM OS/400 Version 3 or later is installed.

There are two types of data transfer, depending on the direction of the transfer.

Data sending
Data is transferred from your workstation to the AS/400 system. You can transfer data to any of the following destinations:

Existing members in an existing AS/400 physical file
New members in an existing AS/400 physical file
New members in a new AS/400 physical file

Note: You cannot transfer data from a workstation file to an AS/400 logical file.

© Copyright IBM Corp. 1989, 1996

Data receiving

Data is transferred from the AS/400 system to your workstation.

While receiving data from the host, you can specify the data to be received and where the data is to be output.

Receivable data includes:

An entire AS/400 file
Part of an AS/400 file
Data combined from several AS/400 files
Summary of record groups

Specify the following output destinations:

Display
Disk
Printer

Also, you can specify the numeric value format.

For more information about data transfer, refer to the *Personal Communications Reference*.

PC Organizer (PC400 Only)

You can use the PC Organizer to run DOS commands and applications or Windows applications from a 5250 display session.

AS/400 Requirements

Before you can use the PC Organizer, one of the following programs must have been installed on the AS/400 system:

Client Access/400 (or OS/400 V3 or later)
PC Support/400 (5738-PC1)

Starting the PC Organizer

To start the PC Organizer:

1. Start a 5250 display session.
2. Sign on to the AS/400 system.

3 Enter the following command on the AS/400 command line:

```
STRPCO  PCTA( NO)
```

Note

PC400 does not support the PC Text Assist (**PCTA**) function, so you should specify this parameter with ***NO**. Even if you specify ***YES**, you cannot use the PC Text Assist function provided by the PC Support/400 Workstation Feature.

You can now use the PC Organizer functions in a 5250 display session by using one of the following methods:

Display and then select choices from the menu.

To display the PC Support/400 or Client Access/400 Organizer menu, enter:

GO PCOMNU

Enter PC Organizer commands.

To start the PC Organizer functions, enter:

STRPCCMD

PCO.EXE Message

When you run a workstation command or program, you might receive a message that the **PCO.EXE** program is not active. You can ignore this message, because it is not necessary for PC400 to activate **PCO.EXE**.

Getting Help

Refer to the online help for more information about using the PC Organizer.

1 Select **Procedures** from the Help menu.

2 When the help window appears, search for organizer or scroll down to **PC Organizer (5250 Session)**.

Select topics in the list to view information about starting and using the PC Organizer, using the PC Organizer menu, and the differences between the PC Organizer provided with PC400 and PC Support/400.

Text Assist (PC400 Only)

With Personal Communications, you can use the improved text editing capability of Text Assist provided by the OfficeVision/400 word processing function to create a document or short messages, or to edit an existing document.

For more information about using Text Assist, refer to the documents for the OfficeVision/400 program.

The Text Assist function in Personal Communications is a “Controller Text Assist,” not the “PC Text Assist” supported by PC Support/400 Workstation Feature.

Controller Text Assist in Personal Communications provides the following functions that are not included in PC Text Assist:

Line commands
132 columns

Controller Text Assist in Personal Communications does not, however, provide the multicolumn edit function that is included in PC Text Assist.

After starting a 5250 display session, you can use the Controller Text Assist function without invoking the **Start PC Organizer** (**STRPCO**) command at the host.

Note: In the Text Assist environment, Alt key functions are assigned to the Ctrl key state to avoid conflicts with existing emulator functions. For example, the Word Underscore (WrdUnd) key is Ctrl+W rather than Alt+ W. Many of these functions can be remapped to the Alt key state without conflicting with emulator functions.

When you draw a line using the cursor draw option of the OfficeVision/400 program, the insert mode is not available.

AS/400 Software Requirements

The AS/400 system must have one of the following programs installed to support the Text Assist features:

OS/400 V2R2.0 with cumulative PTF C3285220 with PTF SF14687
OS/400 V2R3.0 with PTF SF14495
OS/400 V3R0.5
OS/400 V3R1.0, or later

Text Assist Key Functions

Following is a list of OfficeVision/400 Text Assist key functions:

Function	Description
Begin of Line	Moves the cursor to the beginning of the line
Begin Bold	Begins bold highlighting
Bottom of Page	Moves the cursor to the bottom of the page
Carrier Return	Ends a line of text or a paragraph by inserting a carrier return
Center Text	Centers a line of text
End of Line	Moves the cursor to the end of the line
End of Page	Inserts an “end of page” character at the cursor position
End Bold/Underscore	Ends bold highlighting and underlining
Half Index Down	Begin subscript or end superscript
Half Index Up	Begin superscript or end subscript
Insert Symbol	Displays a menu for special symbols
Display Text Codes	Shows hidden text controls
Next Column	Inserts a “next column” instruction at the cursor position.
Next Stop Code	Moves the cursor to the next stop code symbol
Required Backspace	Moves the cursor one space to the left
Required Space	Inserts a required space to keep words together on a line
Required Tab	Indents a block of text
Stop Code	Inserts a stop code at the cursor position
Top of Page	Moves the cursor to the top of the page
Begin Underscore	Begins underlining text
Word Underscore	Underlines the word that starts at the cursor position

Chapter 8. Enabling Client/Server Applications

Personal Communications's support for APPN end nodes lets you take advantage of APPN network nodes. An APPN network allows automatic locating of partner applications and dynamic, optimized route selection. These features allow workstations to communicate more flexibly with other systems in the network.

Personal Communications also provides support for 32-bit APPC and CPI-C APIs, which provide convenient ways for 32-bit client application programs on your workstation to communicate with those on other workstations.

Configuring a Node

Before you can take advantage of the client APIs and communicate with other application programs, you first need to configure Personal Communications as an SNA end node.

To configure an SNA node:

1. From the Start menu, select: **Programs**
   IBM Personal Communications
   SNA Node Configuration

   The Personal Communications SNA Node Configuration window appears.

2. Select the necessary Configuration Options in the order listed on the window.

   To select an option, click it and then click **New...**.

   Enter the required information, or select values for the session parameters on the Basic property sheet and then click **OK**. Click **Help** to display parameter details.

3. Click **Save** or **Save As** from the File menu.

4. Type the file name and then click **Save**. Note that you can choose the file type and where to save this file. The default file type is *.PCG and the default directory is the PRIVATE subdirectory in your Personal Communications directory.

   When you save an SNA configuration file, you are also making it the default.

© Copyright IBM Corp. 1989, 1996

5 Click **Exit** from the File menu.

Hint

If you have more than one configuration file, you can apply additional configuration files to an active node. Refer to Help in SNA Node Operations for details.

Starting an SNA Node

To start an SNA node:

1 From the Start menu, select
Programs
IBM Personal Communications
Administrative and PD Aids
SNA Node Operations

The Personal Communications SNA Node Operations window appears.

2 Click **Start Node...** from the Operations menu.

The Select configuration file to use... window appears.

3 Double-click the configuration file (*.PCG) that defines the node you want to start.

Stopping an SNA Node

To stop an SNA node:

1. From the Start menu, select **Programs**
   IBM Personal Communications
   Administrative and PD Aids
   SNA Node Operations

   The Personal Communications SNA Node Operations window appears.

2. Click a resource in the Alias column.

3. Click **Stop Node...** from the Operations menu.

Chapter 9. Where to Find More Information

This chapter discusses getting help when you are installing, configuring, or using Personal Communications.

Online Help

This help facility describes how to install, configure, and use Personal Communications. Online help is very extensive and includes information about every aspect of configuring and using Personal Communications.

Use help to obtain the following information:

- Menu choices
- Operation procedures
- Operations in windows
- Meanings of the terms displayed in windows
- Causes of errors and the corresponding actions to take
- Mouse-based operations
- Operation without a mouse
- Detailed explanations of specific terms
- Further technical information about Personal Communications
- Detailed explanations of operator information area (OIA) messages

How to Use Online Help

To display online help, select choices from the Help menu.

You can use Personal Communications online help just as you use the online help for Windows 95.

© Copyright IBM Corp. 1989, 1996

Messages

Online messages are displayed during Personal Communications sessions but a message does not always mean an error occurred. For example, a message might tell you that an operation is in progress or has been completed. A message can also prompt you to wait for the completion of an operation.

Page Fault Messages

If a message does appear in a pop-up window, you can paste its contents into the Windows 95 clipboard. To do this:

1. Click **Details Command** on the pop-up window.
2. Mark the text that you want to copy.
3. Right click the marked text and then click **Copy**.
4. Start an editor, such as Notepad, and click **Paste** from the Edit menu.
5. Save the file in case an IBM Service Representative needs this information to diagnose your problem.

OIA Messages

Personal Communications displays messages in the operator information area (OIA) or in a pop-up window. Messages from Personal Communications are displayed in the message window; messages from the host system are displayed in the OIA of the session window.

The bottom line of the session window is the OIA. The OIA indicator indicates the status of Personal Communications as well as information about the workstation, host system, and attachment method.

All of the OIA indicators, reminders, and messages are described in the online help. To view this information:

1. Select **Index** from the Help menu.
2. Select **The operator information area messages**.

Hint

To look up a specific OIA message, select **Search**. When the Search window appears, type the letters that appear in the OIA. For example, MACH or PROG. If a lightning bolt appears, type COMM.

Double-click the index entry that matches your search and then scroll through the window until you find the number that appears in your OIA.

Personal Communications Library

The Personal Communications library includes the following publications:

CD-ROM Guide to Installation, GC31-8078
Up and Running, SC31-8205
Reference, SC31-8206
Emulator Programming, SC31-8207
Client/Server Communications Programming, SC31-8208
System Management Programming, SC31-8199

These books are also available in BookManager format and are optionally installed.

Related Publications

For information about local area networks (LANs), refer to the following publications:

IBM Local Area Network Technical Reference

AS/400 Communications: Local Area Network (LAN) Guide Version 2

For more information about NetWare, refer to the publications for the following products:

For the client	*NetWare Client for Windows*
For NetWare for SAA	*NetWare for SAA*

Contacting IBM

This section lists a number of ways you can reach IBM for various reasons. Depending on the nature of your problem or concern, we will ask you to be prepared to provide us with some information to allow us to serve you better.

If you have a technical problem, please take the time to review and carry out the actions suggested here. Use your local support personnel before contacting IBM. Only persons with in-depth knowledge of the problem should contact IBM; therefore, support personnel should act as the interface with IBM.

If you determine that you need to contact IBM, the following section describes the services IBM provides.

Statement of Service

IBM provides defect support through Program Services. A defect related problem means the program does not conform to specifications and could be either a code or documentation error.

For information on how you can access Program Services or other fee-based support services in the U.S.A., please contact the Project Office at 800-799-7765. Hours of operation are from 8:00 a.m. - 5:00 p.m. Eastern Time, Monday through Friday, except U.S. national holidays.

The terms and conditions for the technical support described in this guide are subject to change.

Reporting Defects

Customers can report code-related problems to IBM electronically, via fax, or through U.S. mail. IBM will respond in the same media as the customer inquiry. IBM will respond to customer inquiries within a maximum of 2 business days of electronic or facsimile receipt, and 7 days of mail receipt advising of the problem disposition.

If the problem reported is not known to be a code-related problem, the customer will be informed that IBM will continue to work on it for a fee if the customer does not have a support contract, or is beyond the “getting started” period. If the problem is determined to be caused by an error in IBM code, the fee will be waived.

Submitting Defects by FAX

To Fax a potential defect to IBM:

1. Call 1-800-992-4777 to have a fax submission form sent to your fax machine. Follow the prompts to select the correct options. Fill out the form and fully describe your problem.
2. Fax the completed defect report to:

   8 -426-86 2

   Be sure to include your Fax number for a response.

Submitting Defects by Mail

To mail a potential defect to IBM:

1. Fully describe your problem
2. Mail the completed defect report to:

   IBM CORPORATION
   PERSONAL SYSTEMS SUPPORT FAMILY
   114 BURNET ROAD
   INTERNAL ZIP 29 1
   AUSTIN, TEXAS 78728

Be sure to include your return address for a response.

Submitting Defects Electronically

IBM will accept potential defect reports submitted using the Internet, TalkLink or Compuserve. Included here for convenience are the steps to access electronic customer support:

TalkLink via IBMLink: The Personal Communications AS/400 and 3270 products are supported via the OS2BBS1 section of the IBMLink service.

1. Access the OS2BBS1 section via an IBMLink Main Menu
2. Select "IBMSupt - IBM PS Defect Submission, CSD Order, & Info Library"
3. Select "PROBrpt - Submit an ETR (Defect Submission)"
4. Select "OTHERProb - PS Supportline - Other IBM Software Products Def. Menu"
5. Select "J-p - PS Supportline - IBM software products J to P Menu"
6. Then select the Personal Communications product in the displayed list (there are various versions and titles displayed, please choose the one that best describes your product)

A temporary reporting number will be displayed at the bottom of the screen. Record this number until a permanent Problem Management Record (PMR) number is assigned to your defect reported.

Finding More Information

Also available in the U.S. is access to the PCOMM CFORUM on TalkLink. If you do not have access to TalkLink, call 1-800-547-1283 (U.S.A. only). TalkLink administration personnel will send you a registration package that lists the available features and the current subscription rates. You should receive the registration package approximately two weeks after calling. Return the necessary documents and TalkLink administration personnel will send you a welcome package that contains the software you need to access TalkLink.

The Internet: To submit a software defect report for a Personal Systems Support Family product, use an internet browser and go to URL:

http://ps.boulder.ibm.com/www/usa/ps/services

Please note that a customer number and a special personal identification number (PIN) is required to access this service. You can call 1-800-992-4777 to receive your customer number and PIN (tell the customer support representative that you need the customer number and PIN for reporting a defect via the Internet).

This will bring you to the IBM Personal Software Services page. Then choose "Electronic Services." From the Electronic Services page, select "Other Electronic Services." On that page, review the section "E-mail Services for Problem Defect Reporting."

IBM Service Home Page

Using an internet browser, go to the following URL:

http://ps.software.ibm.com

Some service fixes and other miscellaneous product information files are located at the following FTP location:

service.boulder.ibm.com/ps/products/pc3270
service.boulder.ibm.com/ps/products/pc400
service.boulder.ibm.com/ps/products/pctlkit
service.boulder.ibm.com/ps/products/nswin
service.boulder.ibm.com/ps/products/anynet

CompuServe: To report a suspected defect in a product in the Personal Systems Support Family via CompuServe:

1. From the CompuServe Main Menu, GO OS2SUPPORT
2. In the Library called "IBM Files" (library 23), download the file PROBLM.TXT.
3. Fill in the appropriate sections of the form contained in PROBLM.TXT (*note: some sections are specific to OS/2 and OS/2 related problems. Please complete the form as completely as possible for your specific operating environment.
4. Using CompuServe E-mail, send this completed form to the address: 76711,611

IBM will reply via CompuServe mail to each PROBLM.TXT defect report received. The reply will include a Problem Management Record (PMR) number. This number is used

by IBM to track each unique problem reported by each customer. The IBM reply will also include any other information necessary for the situation.

Other Ways to Contact IBM

Information about Personal Communications is available from the following sources:

The PCOMM CFORUM

This forum is monitored by Personal Communications users and, when possible, by Personal Communications developers.

- In the U.S., access the PCOMM CFORUM on the OS2BBS bulletin board via TalkLink.

  If you do not have access to TalkLink/OS2BBS, call 1-800-547-1283 (U.S.A. only). TalkLink administration personnel will send you a registration package that lists the available features and the current subscription rates. You should receive the registration package approximately 2 weeks after calling. Return the necessary documents and TalkLink administration personnel will send you a welcome package that contains the software you need to access TalkLink/OS2BBS.

  IBMLink customers can register via SMARTLink's new TalkLink selection.

- In Canada, access the PCOMM CFORUM via IBMLink.
- In Australia, to access the PCOMM CFORUM:
  1. Type NEWMENU to access the pilot menus.
  2. Select **FORUMS**.
- In Europe, the Middle East, and Africa, use DIAL-IBM to access the PCOMM CFORUM via the CONFER application on OS2BBS.

  If you do not have access to OS2BBS, contact your country DIAL-IBM help desk.

Internet

IBM Personal Software Services has a home page on the Internet that has general product information as well as service information about APAR fixes. Using an Internet browser such as IBM Web Explorer, go to the following URL: http://ps.software.ibm.com/www/usa/ps/services/

IBM Networking Software has a home page on the Internet that also has general product information and service information. Using an Internet browser such as IBM Web Explorer, go to the following URL: http://www.raleigh.ibm.com/

IBM Personal Communications Online Customer Support

Access this electronic bulletin board to view information APARs and to obtain APAR fixes. To request that an APAR fix be made available, either leave a message for SYSOP on the bulletin board or call 1-800-992-4777 (U.S.A. only).

Finding More Information

To access the electronic bulletin board:

- Dial 919-543-8200 (country code: 001 from outside the U.S.A.).
- Use protocol N81.
- Follow the instructions. Entering your first name and last name registers you the first time you use the facility.

The IBM Software Solutions Center

From the U.S.A., call 800-992-4777. From Canada, call 800-465-2222. Outside call IBM International Information at 800-426-1774.

The OS/2 Developer's Assistance Program

Call 407-982-6408 (country code: 001 from outside the U.S.A.).

Appendix A. Directories and System File Modifications

This appendix describes the directories that are created and how the system files are modified during installation.

Directories Created by the Installation Program

The program creates five subdirectories in the root of the main Personal Communications directory: **INCLUDE, LIB, PDFPDT**, **PRIVATE**, and **SAMPLES**. With the exception of the **PRIVATE** subdirectory, the subdirectories might contain files only when you have selected to install them.

PRIVATE Subdirectory

This is almost empty when you first install Personal Communications (unless you have migrated from a previous version), but if you create and save configurations, the following types of files are stored here:

Personal files in the PRIVATE subdirectory:

- Workstation (session) profiles (.WS)
- Client/server configuration files (.PCG)
- Batch files (to start multiple sessions) (.BCH)
- Keyboard files (.KMP)
- Pop-up keypad files (.PMP)
- Mouse files (.MMP)
- Macro files (.MAC)
- Automatic-dial facility files (.ADU)
- File-transfer translation files (.XLT)
- User profile (.UPR) (PC400 only)
- Tool bar files (.BAR)

© Copyright IBM Corp. 1989, 1996

SAMPLES Subdirectory

This has several subdirectories, each containing the executable and source files for a sample program. The header and LIB files are stored in the Personal Communications\samples directory.

These programs are designed to illustrate the use of a programming interface:

DDXFER Shows how the EHLLAPI interface can be used to create a Drag-and-Drop application.

HLLSMP Shows how the EHLLAPI interface can be used by an application on your workstation to request keystrokes and to log on to a VM system.

LISTFILE Illustrates how the dynamic data exchange (DDE) interface can make use of the **LOAD** button to transfer files from a VM host system (PC/3270 only).

PCSMAIN Illustrates the use of the PCSAPI interface.

SPL2FILE A DDE sample program that converts the AS/400 spooled file to the workstation file.

SRPSMP Shows how the SRPI SEND_REQUEST interface verb can be used by a requester application on your workstation to invoke a server on the host.

VBDDE Illustrates the use of the DDE interface with Microsoft Visual Basic**.

VBHLLAPI Illustrates the use of the EHLLAPI interface with Microsoft Visual Basic.

VBPCSAPI Illustrates the use of the PCSAPI interface with Microsoft Visual Basic.

PDFPDT Subdirectory

This directory contains PDF/PDT files used by Personal Communications print function in PDT mode. Refer to “Using PDT Files” on page 44 for more information about using PDF/PDT files.

Modifying System Files

AUTOEXEC.BAT: When Personal Communications is installed, you can choose to have your AUTOEXEC.BAT file modified so you can run applications that use the client APIs supported by Personal Communications.

Appendix B. Attachment Considerations

This appendix describes factors you should consider when configuring Personal Communications for the attachment types listed here.

COAX Attachment

This section describes factors you should consider when configuring Personal Communications with a coaxial attachment.

Note: The APPC and CPI-C APIs, provided with Personal Communications, do not support coaxial connections.

Avoiding Machine Check 207

Patch the microcode of the 3174 control unit. The following table shows the relationship between 3174 control unit microcode levels and patch IDs:

Microcode Level	Patch ID
S0503	PCA53D1
S0504	PCA53D2
A0503	PCA53D3
A0504	PCA53D4
B0200	PCA53D5
B0401	PCA53D6
B0402	PCA53D8
C0101	PCA53D7

In addition, if you have a 3174 with Configuration Support B or higher, you can set the following parameters:

3174 customization Q126 digit 2=1 to change the COAX timeout from 50 to 100 microseconds.

3174 customization Q125 digit 4=1 to set command chaining off.

© Copyright IBM Corp. 1989, 1996

Polling Feature

Some workstations disable interrupt-level 2 (IRQ 9) and reserve it for their own use. IRQ 9, a redirected IRQ 2, is the only interrupt level that can be used by the IBM 3278/79 emulation adapter. Sometimes, when you try to use PC/3270 for coaxial attachment with this type machine, you cannot connect to a host system.

If this happens, add the **Poll=Y** parameter to the [CSDFT] or [CNDFT] section of your workstation profile (.WS) as follows:

SNA/DFT attachment

```
[CSDFT]
Poll=Y          <-- add
```

Non SNA/DFT attachment

```
[CNDFT]
Poll=Y          <-- add
```

Sometimes PC/3270 cannot receive an interrupt from a 3270 credit card adapter (PCMCIA). The default value of the Poll parameter is Y for a 3270 credit card attachment.

Functions Not Available with DFT Attachment

When your workstation is configured to use a DFT attachment, the following functions and capabilities of the IBM 3174 or 3274 Control Units are not supported:

Programmed symbols on attached workstations
Attachment to port 0 on attached workstations
Database operations
3270 Diagnostic Reset Dump
Patch facility

PCMCIA Configuration for a DFT Attachment

Using PCMCIA: If your workstation has an IBM 3270 Emulation Credit Card Adapter (3270 CCA) installed, Personal Communications uses it in the same way as the IBM 3278/79 Emulation or 3270 Connection Adapter.

You cannot use multiple 3270 CCAs; nor can you use a 3270 CCA at the same time as a 3278/79 Emulation or 3270 Connection Adapter. Before you can use a PCMCIA card, you must register it in Windows 95 before you start Personal Communications. Refer to Appendix C, “Adapter Setup Hints and Tips” on page 95 for more information.

LAN via IEEE 802.2 Attachment

Following is a description of preinstallation considerations for installing Personal Communications for use on a LAN. For more detailed information, refer to the *IBM Local Area Network Technical Reference*.

Using a PCMCIA Token-Ring or Ethernet Card

PC/3270 supports the IBM Token-Ring and Ethernet credit card adapters in the same way as it does the full-size adapters.

PIU Size: This value is negotiated between your workstation and the host system, unless XID=No is defined on the PU or the Adjacent CP name has been changed to Host - XID in SNA Node Configuration. If this value is not negotiated, the Maximum PIU size must match the MAXDATA value defined on the host system.

LAN via IPX/SPX (NetWare for SAA) Attachment

You can have 3270 sessions on an IPX/SPX network through a NetWare for SAA Gateway.

Note: The APPC and CPI-C APIs, provided with Personal Communications, do not support IPX/SPX connections.

IPX/SPX Protocol Driver

You must set up your Windows environment for the Novell network, and install NWIPXSPX.DLL (provided by Novell) in your windows\system directory.

To obtain the WINUPn diskettes from the IBM PC Company BBS, use an internet browser and go to URL:

http://pccbbs.raleigh.ibm.com

For more information, refer to “Setting Up Windows for LAN-via-NetWare-for-SAA Attachment” in the online help.

Restrictions

The following functions are not available with this connectivity.

SDDLU (self-defining dependent LUs)
SNA session-level compression and decompression

TCP/IP Connection

This section provides information, considerations, and restrictions for Personal Communications TCP/IP connections.

Note: The APPC and CPI-C APIs, provided with Personal Communications, do not support TCP/IP connections.

TCP/IP Protocol Driver

You must set up your Windows environment for the TCP/IP network. To verify that the TCP/IP protocol is installed on your workstation, double-click **Network** in your Control Panel and see if TCP/IP appears in the list of network components. Double-click **TCP/IP** to specify your IP address and other TCP/IP properties.

Restrictions

The following functions are not available with this connectivity.
- SDDLU (self-defining dependent LUs)
- SNA session-level compression and decompression
- The maximum packet size must be less than 8000 bytes for file transfer.

Screen Size

The following four screen sizes are supported:

24 x 80
32 x 80
43 x 80
27 x 132

Terminal Type to Be Negotiated

The terminal type to be negotiated is set to IBM-3278-2-E, IBM-3278-3-E, IBM-3278-4-E, or IBM3278-5-E according to the screen size that is specified on the Customize Communication - 3270 Host panel. If you need to specify IBM-3279-2-E or IBM-3279-3-E (for graphics), add the following line to the [Telnet3270] section in the workstation profile (.WS):

```
TerminalType=3279
```

Windows NT SNA Client

To run Personal Communications as a Windows NT SNA client, you must first install the Microsoft SNA Server client files on your workstation. Then, when you install Personal Communications, you can choose one of the following attachment types on the Customize Communication window:

Telnet3270
Telnet5250
Windows NT client (using the FMI interface)
Windows NT client (using the LUA interface)
Windows NT client (using the APPC interface)

Restrictions

Before you install Personal Communications on Windows NT, you must log on as an administrator so you can create the Personal Communications folder and make it common.

You cannot use the FMI, APPC, and LUA interface attachment types at the same time.

The SNA Server response time monitor (RTM) feature is not supported.

16-bit EHLLAPI, SRPI, and PCSAPI applications are not supported.

Applications cannot allocate 5 MB of memory from range 0x20000000.

User-defined code pages are not supported.

SDLC - MPA Attachment

This section describes factors you should consider when configuring Personal Communications with an SDLC attachment.

Line Speed

For the SDLC attachment, a line speed up to 28.8 Kbps is supported. However, actual line speed will vary depending on the carrier speed the modem supports.

V.25bis Autodial

Personal Communications only supports the bit-oriented protocols for V.25bis call control messages. Therefore, modems must support an ASCII coded character set consisting of 7-bit coded ASCII characters with odd parity.

Personal Communications supports the following adapters:

IBM Multiprotocol Communications Adapter (73G7099)

IBM MultiProtocol Adapter/A (645114 or later)

Performance Considerations

With SDLC attachment, if you use multiple sessions in a high-speed and high-load configuration, or if you run the session at the same time with other multiple applications, the connection to the host might fail. In this case, specify host or Personal Communications timeout values such that the host's timeout value is greater than that of Personal Communications.

To change the host timeout value, modify the following NCP parameters:

REPLYTO
The maximum duration in seconds that the host waits for a reply from the terminal. The default is 1 second.

RETRIES=(m,t,n)
The number of attempts to be made to recover from errors occurring during transmission over the link. Repetitive retries are called a retry sequence. The maximum number of retries is specified as m, which can be from 0 to 128. NCP pause (the time between the retry sequences) is specified as t and can be from 1 to 255 seconds. The maximum number of retry sequences is specified by n and can be from 1 to 127.

For example:

REPLYTO=1, RETRIES=(3,4,5)
((1(seconds) x 3(times) + 4(seconds)) x 5(times)
= 35 (seconds)

Note: In this example, the host will wait 35 seconds for the terminal to reply.

For more details, ask your system personnel.

To change the Personal Communications timeout value, type a new value in the Inactivity timer field on the Performance page of the Connections property sheet in SNA Node Configuration.

The value is in seconds and can be from 4 to 16. The default is 8.

PIU Size: This value is negotiated between your workstation and the host system, unless XID=No is defined on the PU or the Adjacent CP name has been changed to Host - XID in SNA Node Configuration. If this value is not negotiated, the Maximum PIU size must match the MAXDATA value defined on the host system.

Preventing Conflicts with MPA Adapters

The multiprotocol adapters use system resources that, in some cases, cannot be shared. Therefore, you must make sure there are no conflicts with the following resources:

DMA level
I/O addresses (MPA0 uses X'380'-X'38F' and MPA1 uses X'3A0'-X'3AF')
IRQ level (ISA bus only)

The IBM Multiprotocol interface adapters use the following system resources:

The AT-bus SDLC adapters require the use of IRQ3 and DMA channel 1 and only the MPA0 communication port is supported.

The MPA for ISA can be supported using mode 4 (IRQ3, IRQ4, and DMA1) or mode A (IRQ4 and DMA1).

To use mode 4, change the IRQ level send/receive field to 3 on the Adapter page of the Device property sheet in SNA Node Configuration.

To use mode A, change the IRQ level send/receive field to 4 on the Adapter page of the Device property sheet in SNA Node Configuration.

Note: When the MPA is configured for IRQ3, another device will not be allowed to use IRQ4 even though only IRQ3 is claimed.

Personal Communications supports the MPA0 or MPA1 communication ports. Some sound cards use an I/O address range within X'380'-X'38F'.

The MPA/A for a microchannel-bus workstation uses IRQ3, and the DMA level is configurable. Both the MPA0 and MPA1 communication ports can be active at the same time and the interrupt is claimed as sharable.

Advantis (IIN) Attachment

Advantis (IIN) is supported using 8-bit no parity; SNA session-level compression and decompression is not supported.

Line Speed

Line speeds up to 115.2 Kbps are supported. The maximum usable line speed depends on the speed of the processor or communication port, however. If communication stops or becomes exceedingly slow, reduce the line speed.

IBM Global Network Connection Attachment

IBM Global Network Connection supports only a single communication port.

Line Speed

At IBM Global Network Connection, up to 38,400 bps is supported as the line speed. However, the maximum usable line speed depends on the speed of the processor or communication port. If communication stops or becomes exceedingly slow, reduce the line speed.

Functions not available with the IBM Global Network Connection

You cannot use the following functions:

- Import/Export
- Host graphics
- Host print
- Server-Requester Programming Interface (SRPI)
- Concurrent multiple file transfers

Home3270 Attachment

Home3270 supports only a single adapter, and you cannot use other connections at the same time.

Line Speed

Line speeds up to 57,600 bps are supported. However, characters might be lost on high-speed lines, depending on the processor speed. If communication stops or becomes exceedingly slow, reduce the line speed.

Unsupported Character Sequences

The following character sequence is valid for the Home3270 attachment. However, it performs no function.

ESC P 1 (Block cursor command)
ESC P 0 (Underline cursor command)
DLE DC2 (Printer start command)
DLE DC4 (Printer end command)

Conditions for Communication Check 50x

Home3270 requires both Data Set Ready (DSR) and Carrier Detect (CD) to determine the state of the attachment with the host system. If DSR is not recognized, communication check 501 appears in the operator information area. When DSR is recognized, if CD is not recognized, communication check 504 appears in the operator information area.

When you select ROLMphone** with DCM in the Home3270 configuration, communication check 504 does not appear.

Restrictions

The following functions are not available with this attachment:

Host graphics
Host print
Server-Requester Programming Interface (SRPI)

3270 Attachment via the AS/400 System

This section provides information, considerations, and restrictions for PC/3270 connections through an AS/400 system.

AS/400 System Setup

PC/3270 can connect to a host computer via one or more AS/400 systems by using the passthru function (usable with OS/400 Version 2.2.0 or later).

To use this function, set the following communication configuration descriptions in the AS/400 system to **on** (Vary On):

Line description
Controller description
Printer description

Error Messages from the AS/400 System

When this system is connected to an S/390 host system via the AS/400 system, the following message might appear on the screen.

AS/4 CPI5xxx

The message might appear for the following reasons:

Line error between the AS/400 system and the host system

Communication configuration description error in the AS/400 system

The communication configuration description in the AS/400 system is set off (Vary Off).

When this message appears, detailed error information is saved in the AS/400 system operator message queue. Refer to the error message that corresponds to the number displayed on the screen and then correct the cause of the error.

Appendix C. Adapter Setup Hints and Tips

This appendix describes how to configure coax and twinax adapters, including PCMCIA cards.

Using Coax (3270) Adapters

Personal Communications supports IBM AT-bus, Micro Channel (MCA), and PCMCIA coax adapters; the configuration of each is described in the following sections.

3278/79 Emulation Adapter (AT-Bus)

This adapter has a fixed I/O-port address and interrupt level (IRQ) but you have to set the memory address, which you can only do through the program that is going to use the adapter.

The adapter is not able to register itself with Windows 95, so you will not see it in Device Manager. Nevertheless, you must ensure that the resources it uses do not conflict with those of any other device in your workstation.

If your workstation has Plug-and-Play bios, its system configuration should ensure that conflicts are avoided. If not, you will have to do this manually, as follows:

1. Open the Windows 95 control panel and select **System**.
2. In the System window, click **Device Manager**, **View Devices by Type**, and then double-click **Computer**.
3. Click **Interrupt request (IRQ)**. The 3270 adapter can use only IRQ 2 (which is usually “cascaded” to 9); if neither of those is free, you must move another device by removing it from the Device Manager, reserving the IRQ for the 3270 adapter, and then reinstalling the other device.
4. Click **Input/output (I/O)**. The 3270 adapter can use only 2D , so you must reserve this too.
5. Click **Memory**. The adapter needs an 8 KB block of memory in the range C000-DFFF, so find one that is free. Write it down.

© Copyright IBM Corp. 1989, 1996

6 To reserve a resource, click the **Reserve Resources** tab, then the appropriate radio button, and then click **Add**.

7 Type or choose the value you want to set. You will be asked if you want to restart your workstation now; do so when it is convenient but, in any case, before you configure Personal Communications. This is because the resource will not be available until the system has restarted and you will not be able to configure Personal Communications.

8 Configure Personal Communications as usual. In the Buffer Address field, type the value that you wrote down.

IBM 3270 Connection Adapter (Micro Channel)

Micro Channel adapters need the same types of resource as AT-bus but configuration is much easier because the resources are all set by the workstation's hardware configuration and Personal Communications is able to read them.

Configure Personal Communications in the normal way; you will see that the Buffer Address field is grayed out.

This adapter is not able to register itself with Windows 95, so you will not see it in Device Manager. The system configuration ensures that there are no resource conflicts.

IBM 3270 Emulation Credit Card Adapter (PC Card)

This card is able to register itself with Windows 95 and, therefore, you can see its configuration in Device Manager. Windows 95 allocates resources to the card and, as with MCA adapters, Personal Communications is able to read them. For this reason, the Buffer Address field is grayed out.

A device driver and an information file (IBM3270.INF) are provided with Personal Communications.

To install the PCMCIA card:

1 Push the card into a slot in your workstation. Windows 95 will display a message telling you that new hardware was found.

2 Accept the default choice, **Driver from disk provided by hardware manufacturer**, and then click **OK**.

3 When the next window appears, type the drive and directory where Personal Communications is installed. For example, C:\Personal Communications if you installed Personal Communications in the default directory.

4 If you look in Device Manager, you will see that the card is now listed under Others.

5 Configure Personal Communications in the normal way; you will see that the Buffer Address field is grayed out.

Using Twinax (5250) Adapters

Personal Communications supports AT-bus, Micro Channel, and PCMCIA twinax adapters; the configuration of each is described in the following sections.

AT-Bus Adapters

The adapters have switches that allow you to set the I/O port address. You also have to set the memory address and the interrupt level (IRQ) but you can do this only through the program that is going to use the adapter.

The adapters are not able to register themselves with Windows 95, so you will not see them in Device Manager. Nevertheless, you must ensure that the resources they use do not conflict with those of any other device in your workstation.

If your workstation has Plug-and-Play bios, its system configuration should ensure that conflicts are avoided. If not, you will have to do this manually, as follows:

1 Open the Windows 95 control panel and select System.

2 In the System panel, click **Device Manager**, then **View Devices by Type**, and then double-click **Computer**.

3 Click **Interrupt request (IRQ)**, and find one of the supported IRQs (3, 4, 5, 6, or 7) that is free. Write the number down.

4 Click **Input/output (I/O)**. Make sure that the address set on the adapter is free; if not, find another that is acceptable to the adapter and is free. The documentation that came with the adapter will tell you which addresses are valid. Write the address down.

5 Click **Memory**. The adapter needs an 8 KB block of memory in the range C000-DFFF, so find one that is free. Write it down.

6 Click the **Reserve Resources** tab, the Memory radio button, and then click **Add**.

7 Type the address range. You will be asked whether you want to restart your workstation now; do so when it is convenient but, in any case, before you configure Personal Communications. This is because the memory will not be available until the system has restarted and you will not be able to configure Personal Communications.

8 Configure Personal Communications as usual. In the appropriate places, type the values that you wrote down.

Micro Channel (MCA) Adapters

Micro Channel adapters need the same types of resource as AT-bus but configuration is much easier because the resources are all set by the workstation's hardware configuration, and Personal Communications is able to read them.

Configure Personal Communications in the normal way; you will see that the three adapter configuration fields are grayed out.

These adapters are not able to register themselves with Windows 95, so you will not see them in Device Manager.

IBM 5250 Emulation Credit Card Adapter (PC Card)

The IBM 5250 Emulation Credit Card Adapter is able to register itself with Windows 95 and, therefore, you can see its configuration in Device Manager. Windows 95 allocates resources to the card and, as with MCA adapters, Personal Communications is able to read them. For this reason, the three adapter configuration fields are grayed out.

A device driver and an information file (IBM5250.INF) are provided with Personal Communications

To install the PCMCIA card:

1 Push the card into a slot in your workstation. Windows 95 will display a message telling you that new hardware was found.

2 Accept the default choice, **Driver from disk provided by hardware manufacturer**, and then click **OK**.

3 When the next window appears, type the drive and directory where Personal Communications is installed. For example, C:\Personal Communications if you installed Personal Communications in the default directory.

4 If you look in Device Manager, you will see that the card is now listed under Others.

5 Configure Personal Communications in the normal way; you will see that the three adapter configuration fields are grayed out.

Appendix D. AS/400 Configuration Examples

To connect PC400 to an AS/400 system, you need to specify configuration information in the workstation profile that accurately corresponds to the information specified in the AS/400 system (referred to as the *device description*).

For example, the LAN attachment via IEEE 802.2 in the following figure shows how the configuration information specified in the PC400 workstation profile corresponds to the configuration information in the AS/400 system.

© Copyright IBM Corp. 1989, 1996

Configuration Examples

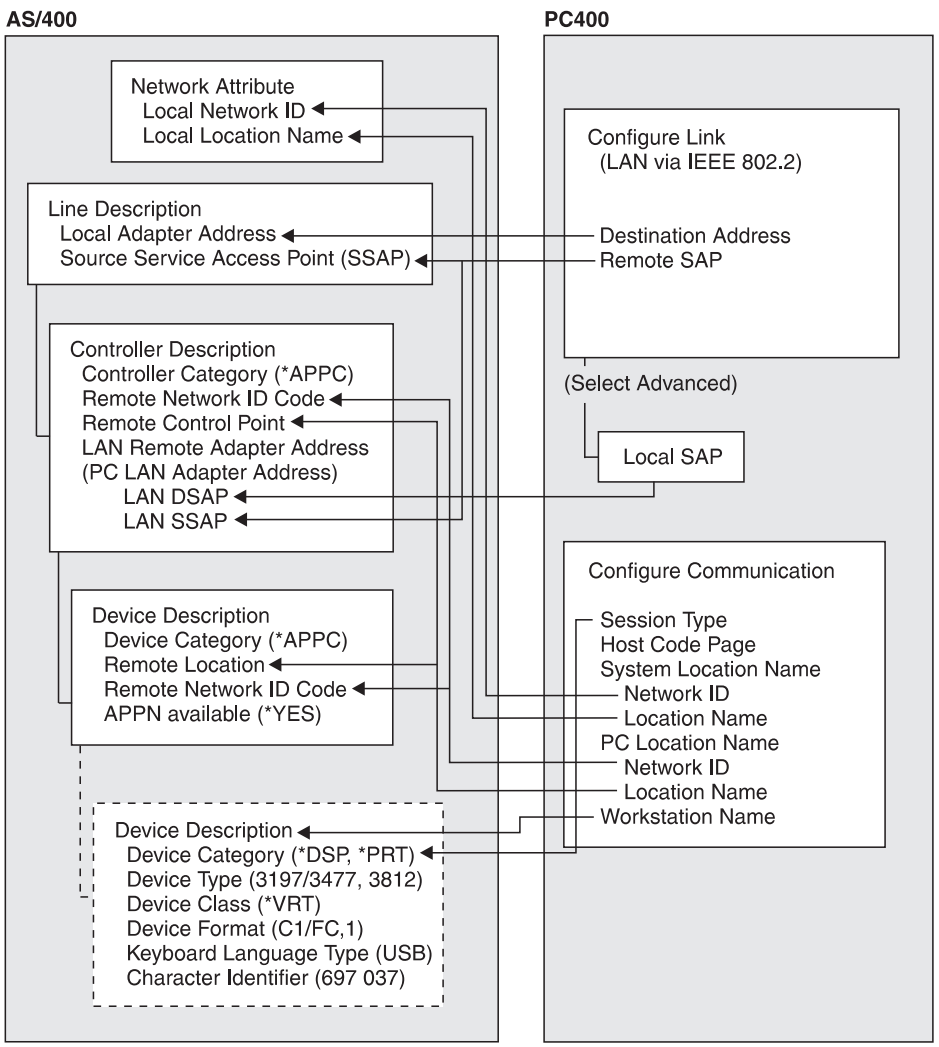

AS/400 Device Description

To configure 5250 display or printer sessions, the following values must be set in the AS/400 device description:

AS/400 Device Description	Display Session		Printer Session
	24 x 80	27 x 132	
Device category	*DSP	*DSP	*PRT
Device class	*VRT	*VRT	*VRT
Device type	3197	3477	3812
Device model	C1	FC	1
Keyboard language type	USB+	USB+	-
Character identify code	697 037+	697 037+	-
+ Depends on the host code page selection.			

5250 Sessions through One Link

If you want all your 5250 sessions to connect through one link to an AS/400 system, use the same **PC Location Name** and the same **Link Parameters** for all the sessions.

For example, you can configure two display sessions and one printer session connected to an AS/400 system using *APPN.PC5250* as the **Location Name**.

```
Session A    : Session Type            : Display
(Display)      System Location Name    :  APPN.S78 1234
                 PC Location Name      :   APPN.PC525
                 Workstation ID        :  (not specified)

Session B    : Session Type            : Display
(Display)      System Location Name    :  APPN.S78 1234
                 PC Location Name      :   APPN.PC525
                 Workstation ID        :  (not specified)

Session C    : Session Type            : Printer
(Printer)      System Location Name    :  APPN.S78 1234
                 PC Location Name      :   APPN.PC525
                 Workstation ID        :  PCLOCALP1
```

In this example, the AS/400 network attributes are:

```
Local network ID : APPN
Local location   : S78 1234
```

Note

Enter **DSPNETA** from a 5250 session to display AS/400 network attributes.

AS/400 System Mode Description

PC400 initially uses mode description **QPCSUPP** on the AS/400 system. If the PC Support/400 program or Client Access/400 is installed on the AS/400 system, QPCSUPP need not be created. If mode description QPCSUPP does not exist on the AS/400 system, create the mode description:

1 Enter the following command on the command line of the main menu of the AS/400 system:

CRTMODD

The Creating Mode Description panel appears.

```
                    Creating Mode Description (CRTMOD )

Type the selected items, and push the Enter key.

Mode Description................                  Name
Maximum Session................. 8          _______          1-512
Maximum number of interaction.... 8          _______          1-512
Number of Local Control Sessions. 4          _______          -512
Number of Pre-joined Sessions....            _______          -512
Inbound Pacing Value............. 7          _______          -63
Outbound Pacing Value............ 7          _______          -63
Maximum Length of Request Unit...  CALC      _______          241-16384,  CALC
Text Description ................  BLANK     ____________________________________

                                                                                 End
F3=Exit      F4=Prompt          F5=Reshow      F1 =Add parameter     F12= Cancel
F13=How to use this panel                    F24=More key
```

2 Type the necessary values in each field, according to the following table.

Field Name	Input Value
Mode description	**QPCSUPP**
Maximum session	**64**
Maximum number of interactions	**64**
Number of local control sessions	**0**
Number of pre-joined sessions	**0**
Inbound pacing value	**7**
Outbound pacing value	**7**
Maximum length of request unit	***CALC**
Text description	This field is optional

3 After you type all the values, press the Enter key.

This completes the creation of the mode description QPCSUPP.

AS/400 Device Description for Twinaxial Attachments (APPC) Example

If you want to use a twinaxial (TDLC) attachment, the AS/400 system requires that you specify a device description. When the automatic device configuration indicator (**QAUTOCFG**) is set to **ON** in the AS/400 system, the device description is created automatically. When the indicator is set to **OFF**, create the device description, as follows:

1 Enter the following command on the command line of the AS/400 system main menu:

```
CRTDEVDSP
```

The Creating Device Description(Display) panel appears.

Twinaxial Attachments

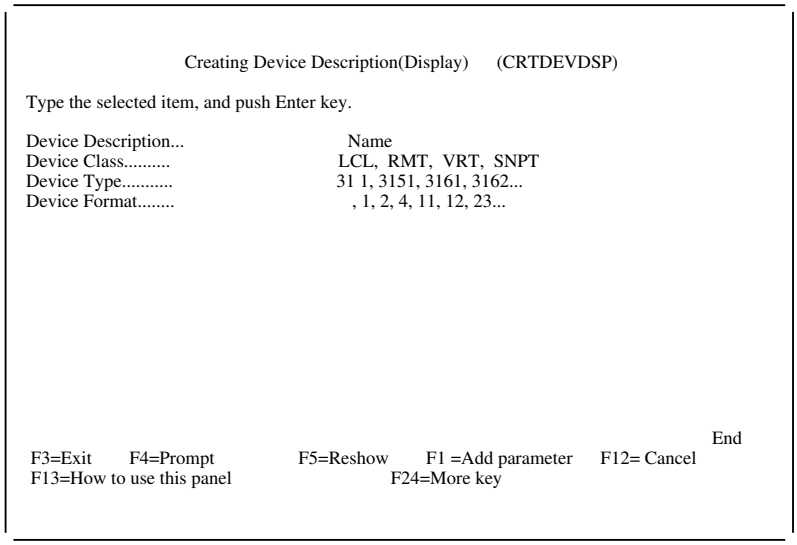

2 Type the values in each field, according to the following table.

Field Name	Input Value
Device description	This is an optional field
Device class	***LCL**
Device type	**5150**
Device format	**2**

3 After you type all values, press the Enter key.

The following screen appears:

```
                    Creating Device Description(Display)     (CRTDEVDSP)

Type the selected item, and push Enter key.

Device Description..........>TWXP A1____________ Name
Device Class................> LOL      ______      LCL, RMT, VRT, SNPT
Device Type.................>515      ______      31 1, 3151, 3161, 3162...
Device Format...............>2        ______      , 1, 2, 4, 11, 12, 23...
Port Number.................          __          -17
Switch Setting..............          __          , 1, 2, 4, 5, 6
Online when IPL.............> YES     ______      YES,    NO
Controller to be attached...          ________    Name
Keyboard Word Type..........> SYSVAL_____         SYSVAL,AGB,AGI,BLI...
Text Description............> BLANK ______________________________

F3=Exit     F4=Prompt            F5=Reshow     F1 =Add  parameter     F12=  Cancel
F13=How to use this panel                      F24=More key
```

4 Type the values for each field, according to the following table.

Field Name	Input Value
Port number	Number of the port to be attached
Switch setting	Device address
Controller to be attached	Description name of the controller to be attached
Keyboard word type	**USB**[1]

[1] Depends on the host code page selection.

5 After you enter all the values, press the Enter key.

This completes the creation of the device description for the twinaxial attachment.

AS/400 Device Description for Asynchronous Attachments Example

If you want to use an asynchronous dial attachment, the AS/400 system requires that you specify configuration parameters for the controller/line/devices to be used.

The following sample is a typical configuration on the AS/400 system for an asynchronous dialed connection through an ASCII Workstation Controller.

1 Enter the following command on the command line of the AS/400 system main menu:

WRKCFGSTS CTL CTL 3

where *CTL 3* is the name of your controller.

The Work with Configuration Status panel appears.

```
                          Work with Configuration Status

Position to . . . . . _____________    Starting characters

Type options, press Enter
   1=Vary on 2=Vary off 5=Work with job 8=Work with description
   9-Display mode status ...

 Opt     Description             Status             ----------Job----------
8_       CTL 3                     ACTIVE
__         ADLCTST                  VARY ON PENDING
__         ASYNC                    VARY ON PENDING
__         ASYNCD                   VARY ON PENDING
__         EZASYNC                  VARY ON PENDING
__         ASYNCP                   VARY ON PENDING
__         ASYNRTR                   ACTIVE

                                                                        BOTTOM
Parameters or command
 ===>

F3=Exit F4=Prompt F12=Cancel F23=More options F24=More keys
```

2 Enter 8 in the Opt field to work with the controller description for CTL03.

The Work with Controller Descriptions panel appears.

```
                        Work with Controller Descriptions

Position to . . . . . _____________   Starting characters

Type options, press Enter
     2=Change 3=Copy 4=Delete 5=Display 6=Print 7=Rename
     8=Work with status 9=Retrieve source 12=Print device addresses

Opt     Controller      Type   Text
2_      CTL 3             6141   CREATED BY AUTO-CONFIGURATION




                                                                      BOTTOM
Parameters or command
  ===>
F3=Exit F4=Prompt F5=Refresh F6=Create F9=Retrieve F12=Cancel
F14=Work with status
```

3 Enter 2 in the Opt field to change the controller description for CTL03.

The Change Controller Description panel appears.

```
                     Change Ctl Desc (local WS) (CHGCTLLWS)

Controller Description . . . . . : CTL 3
Option . . . . . :  BASIC
Category of controller . . . . . :  LWS

Controller type   . . . . . : 6141
Controller model . . . . . : 1
Resource name   . . . . . : CTL 3
TDLC line   . . . . . : QTDL429
Online at IPL   . . . . . :  YES
Auto-configuration controller   . . :  YES
Text . . . . . : CREATED BY AUTO-CONFIGURATION
Device wait timer   . . . . . : 1



Press Enter to continue.
  ===>
                                                                      BOTTOM
 F3=Exit  F4=Prompt  F5=Refresh  F12=Cancel  F13=How to use this display
F24=More keys
```

4 Type the values in each field, according to the following table.

Field Name	Input Value
Controller description	CTL03
Resource name	CTL03
Online at IPL	*YES
Device wait timer	10
Auto-configuration controller	*YES
Text description	This field is optional

The Work with Controller Descriptions panel appears.

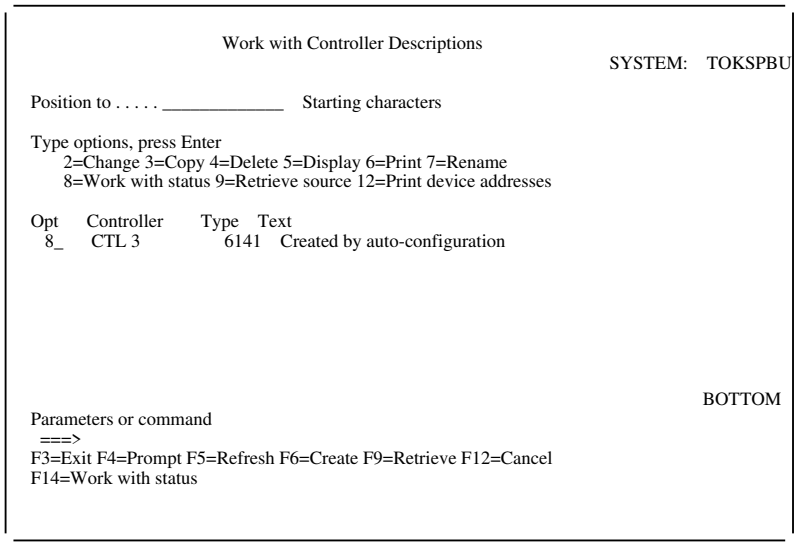

5 Enter 8 in the Opt field to work with the configuration status.

The Work with Configuration Status panel appears.

```
                        Work with Configuration Status

Position to . . . . . _____________   Starting characters

Type options, press Enter
   1=Vary on 2=Vary off 5=Work with job 8=Work with description
   9-Display mode status ...

 Opt    Description            Status            ----------Job----------
__      CTL 3                    ACTIVE
__        ADLCTST                  VARY ON PENDING
__        ASYNCPERTH               VARY ON PENDING
__        ASYNCD                   VARY ON PENDING
__        EZASYNC                  VARY ON PENDING
__        ASYNCP                   VARY ON PENDING
8_        ASYNRTR                  ACTIVE

                                                                      BOTTOM
Parameters or command
 ===>

F3=Exit F4=Prompt F12=Cancel F23=More options F24=More keys
```

6 Enter 8 in the Opt field next to ASYNRTR to work with the display device description.

The Work with Device Descriptions panel appears.

```
                        Work with Device Descriptions

Position to . . . . . _____________   Starting characters

Type options, press Enter
     2=Change 3=Copy 4=Delete 5=Display 6=Print 7=Rename
     8=Work with status 9=Retrieve source

Opt    Controller      Type    Text
 2_    ASYNRTR           515   FOR  PC4









                                                                      BOTTOM
Parameters or command
 ===>
F3=Exit F4=Prompt F5=Refresh F6=Create F9=Retrieve F12=Cancel
F14=Work with status
```

7 Enter 2 in the Opt field to change the device description.

The Change Device Description panel appears.

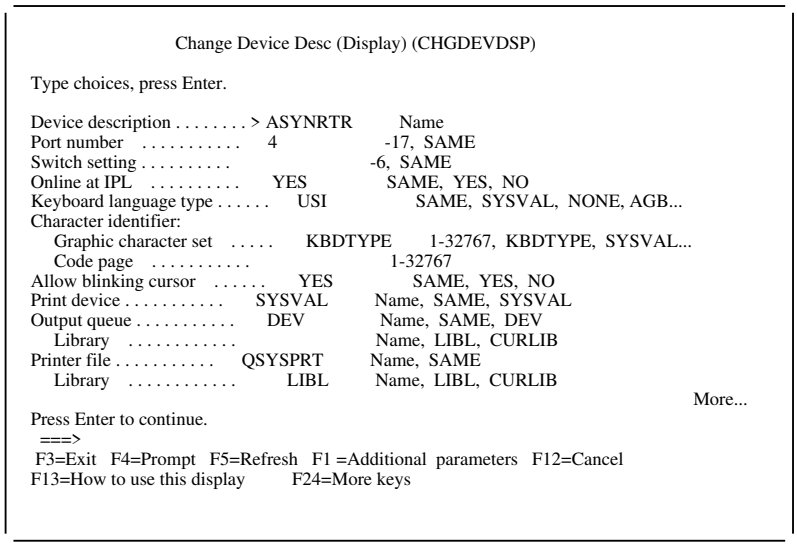

```
                    Change Device Desc (Display) (CHGDEVDSP)

Type choices, press Enter.

Device description . . . . . > ASYNRTR         Name
Port number  . . . . . .     4                 -17, SAME
Switch setting . . . . . .                     -6, SAME
Online at IPL  . . . . . .     YES             SAME, YES, NO
Keyboard language type . . . . .   USI         SAME, SYSVAL, NONE, AGB...
Character identifier:
   Graphic character set  . . . .    KBDTYPE    1-32767, KBDTYPE, SYSVAL...
   Code page  . . . . . .                       1-32767
Allow blinking cursor  . . . . .     YES         SAME, YES, NO
Print device . . . . . .     SYSVAL            Name, SAME, SYSVAL
Output queue . . . . . .     DEV               Name, SAME, DEV
   Library  . . . . . .                        Name, LIBL, CURLIB
Printer file . . . . . .     QSYSPRT           Name, SAME
   Library  . . . . . .      LIBL              Name, LIBL, CURLIB
                                                                    More...
Press Enter to continue.
  ===>
 F3=Exit  F4=Prompt  F5=Refresh  F1 =Additional parameters  F12=Cancel
F13=How to use this display       F24=More keys
```

This completes the creation of the controller and display device descriptions for an asynchronous dial attachment.

Appendix E. Default Key Function Assignments

This appendix lists the functions assigned, by default, to each key on your keyboard.

For more information about each function, refer to the **Keyboard** choice on the Help menu.

You can change the default key assignments to the following default function tables, by selecting **Keyboard Setup** from the Assist menu.

When the Keyboard Setup window appears, select one of the following choices:

3270 for a 3270 keyboard layout
5250 for a 5250 keyboard layout
3270+5250 for a combined keyboard layout

Default Key Functions for a 3270 Layout

Table 3 shows the default key functions for PC/3270. The key used is the same for all the supported keyboard types.

Table 3 (Page 1 of 3). Default Key Functions for a 3270 Layout

Function of Key	Key
APL	Ctrl+F8
Attention	Esc
Alternate Cursor	Alt+F11
Backspace	— (Backspace)
Back Tab	Shift+— |
Back Tab Word	Alt+←
Break	Break
Change Format Toggle	Alt+F3
Change Screen	Ctrl+PageUp
Clear	Pause
Color Blue	Ctrl+Shift+F5
Color Field Inherit	Ctrl+Shift+F8
Color Green	Ctrl+Shift+F3
Color Pink	Ctrl+Shift+F2

© Copyright IBM Corp. 1989, 1996

Key Functions and Assignments

Table 3 (Page 2 of 3). Default Key Functions for a 3270 Layout

Function of Key	Key
Color Red	Ctrl+Shift+F1
Color Turquoise	Ctrl+Shift+F6
Color White	Ctrl+Shift+F7
Color Yellow	Ctrl+Shift+F4
Cursor Blink	Ctrl+F10
Cursor Down	↓ or 2(pad)
Cursor Left	← or 4(pad)
Cursor Right	→ or 6(pad)
Cursor Select	Ctrl+F9
Cursor Up	↑ or 8(pad)
Delete Character	Delete or .(pad)
Delete Word	Ctrl+Delete or Ctrl+.(pad)
Document Mode Toggle	Alt+F1
Dup	Shift+Insert
Edit Copy	Ctrl+Insert
Edit Cut	Shift+Delete
Edit Paste	Shift+PageDown or Ctrl+Shift+Insert
Edit Undo	Alt+ — (Backspace)
End Field	Pad End
Enter	Right Ctrl
Enter/Control	Right Ctrl
Erase EOF	End
Erase Field	Shift+End
Erase Input	Alt+End
Fast Cursor Down	Alt+↓ or Alt+2(pad)
Fast Cursor Up	Alt+↑ or Alt+8(pad)
Field Mark	Shift+Home
Graphic Cursor	Alt+F12
Highlighting Field Inherit	Alt+3(pad)
Highlighting Reverse	Alt+*(pad)
Highlighting Underscore	Alt+6(pad)
Home	Home or 7(pad)
Insert	Insert or 0(pad)
Jump Next	Alt+PageUp
New Line	↵ (Enter)
Mark Down	Shift+↓

Table 3 (Page 3 of 3). Default Key Functions for a 3270 Layout

Function of Key	Key
Mark Left	Shift+←
Mark Right	Shift+→
Mark Up	Shift+↑
Move Mark Down	Ctrl+↓ or Ctrl+2(pad)
Move Mark Left	Ctrl+← or Ctrl+4(pad)
Move Mark Right	Ctrl+→ or Ctrl+6(pad)
Move Mark Up	Ctrl+↑ or Ctrl+8(pad)
PA1	Alt+Insert
PA2	Alt+Home
PA3	Shift+PageUp
Pause	Ctrl+F7
PF1 to PF12	F1 to F12
PF13 to PF24	Shift+F1 to F12
Play	Ctrl+F6
PS Field Inherit	Ctrl+Shift+(pad)0
Print (Local Copy)	Not assigned
Quit (Device Cancel)	Alt+Left Ctrl
Record	Ctrl+F5
Reset/Control	Left Ctrl
Response Time Monitor	Ctrl+F11
Rule	Ctrl+Home
Sys Request	Shift+Esc
Tab Field	—| or Shift+—|(pad)
Tab Word	Alt+→
Test	Ctrl+PageDown
Transparency Field Inherit	Ctrl+Shift+8(pad)
Transparency Opaque	Ctrl+Shift+/(pad)
Word Wrap Toggle	Alt+F2

Indicates the key on the main keyboard.
(*pad*) Indicates a key on the numeric keypad.

Note: The Enhanced keyboard has some duplicated keys. The functions of the duplicated keys are the same except when you specify a single key. For example, *Del* means any Delete key, whereas *Pad Del* specifies only the Delete key on the numeric keypad.

Default Key Functions for a 5250 Layout

Table 4 shows the default key functions for PC400. The key used is the same for all the supported keyboard types.

Note: If you use PC400 from the combined package, see "Default Key Functions for the Combined Package" on page 118.

Table 4 (Page 1 of 3). Default Key Functions for a 5250 Layout

Function of Key	Key
Alternate Cursor	Ctrl+F11
Attention	Esc
Backspace	— (Backspace)
Backtab	Shift+— |
Backtab Word	Alt+←
Begin Bold	Ctrl+B
Begin of line	Ctrl+4(pad)
Begin Underscore	Ctrl+U
Bottom of Page	Ctrl+2(pad)
Carrier Return	Ctrl+Enter or Ctrl+– (pad) or Ctrl++ (pad)
Center Text	Ctrl+C
Clear	Pause
Cursor Blink	Ctrl+F10
Cursor Down	↓ or 2(pad)
Cursor Left	← or 4(pad)
Cursor Right	→ or 6(pad)
Cursor Up	↑ or 8(pad)
Delete Character	Delete or .(pad)
Delete Word	Ctrl+Delete or Ctrl+.(pad)
Display Text Code	Alt+Insert
Dup	Shift+Insert
Edit Copy	Ctrl+Insert
Edit Cut	Shift+Delete
Edit Paste	Shift+PageDown or Ctrl+Shift+Insert
Edit Undo	Alt+ — (Backspace)
End Bold/Underscore	Ctrl+J
End of line	Ctrl+6(pad)
End of page	Ctrl+P

Table 4 (Page 2 of 3). Default Key Functions for a 5250 Layout

Function of Key	Key
Enter/Control	Right Ctrl
Erase EOF	End or 1(pad)
Erase Input	Alt+End
Fast Cursor Down	Alt+↓ or Alt+2(pad)
Fast Cursor Up	Alt+↑ or Alt+8(pad)
Field Exit	Enter(pad) or ↵ (Enter)
Field Mark	Shift+Home
Field Minus (–)	–(pad)
Field Plus (+)	+ (pad)
Half Index Down	Ctrl+H
Half Index Up	Ctrl+Y
Help	Alt+F1
Home	Home or 7(pad)
Host Print	Ctrl+Pause
Insert	Insert or 0 (pad)
Insert Symbol	Ctrl+A
Jump Next	Alt+PageUp
Mark Down	Shift+↓
Mark Left	Shift+←
Mark Right	Shift+→
Mark Up	Shift+↑
Move Mark Down	Ctrl+↓
Move Mark Left	Ctrl+←
Move Mark Right	Ctrl+→
Move Mark Up	Ctrl+↑
New Line	Shift+ ↵ (Enter)
Next Column	Ctrl+D
Next Stop	Ctrl+N
Pause	Ctrl+F7
PF1 to PF12	F1 to F12
PF13 to PF24	Shift+F1 to F12
Play	Ctrl+F6
Quit	Alt+Left Ctrl
Record	Ctrl+F5
Required Backspace	Ctrl+ — (Backspace)
Required Space	Ctrl+Space
Required Tab	Ctrl+— |

Table 4 (Page 3 of 3). Default Key Functions for a 5250 Layout

Function of Key	Key
Reset/Control	Left Ctrl
Roll Down	9(pad) or PageUp
Roll Up	3(pad) or PageDown
Rule	Ctrl+Home
Stop Code	Ctrl+S
System Request	Shift+Esc
Tab Field	—|
Tab Word	Alt+→
Test Request	Alt+Pause
Top of Page	Ctrl+8(pad)
Word Underscore	Ctrl+W

(pad) indicates a key on the numeric keypad.

Default Key Functions for the Combined Package

Table 5 shows the default key functions for the combined package. The key used is the same for all the supported keyboard types.

When you use the 3270+5250 keyboard layout, the key definitions for the 3270 and 5250 layouts are combined with those listed here.

Table 5. Default Key Functions for the Combined Package

Function of Key	Key
Change Screen	Not assigned
Character Advance	Shift+BackSpace
Help	Not assigned
Host Print	Not assigned
PA3	Not assigned
Roll Down	PageUp
Roll Up	PageDown

Appendix F. Notices

References in this publication to IBM products, programs, or services do not imply that IBM intends to make these available in all countries in which IBM operates. Any reference to an IBM product, program or service is not intended to state or imply that only IBM's product, program, or service may be used. Subject to IBM's valid intellectual property or other legally protectable rights, any functionally equivalent product, program, or service may be used instead of the IBM product, program, or service. Evaluation and verification of operation in conjunction with other products, programs, or services, except those expressly designated by IBM, are the user's responsibility.

IBM may have patents or pending patent applications covering subject matter in this document. The furnishing of this document does not give you any license to these patents. You can send license inquiries, in writing, to the IBM Director of Licensing, IBM Corporation, 500 Columbus Avenue, Thornwood, NY 10594, U.S.A.

For license inquiries regarding double-byte character set (DBCS) information, contact:

IBM World Trade Asia Corporation Commercial Relations
IBM Kamiya-cho Building, 4-3-9 Toranomon, Minato-ku
Tokyo, Japan

Licensees of this program who wish to have information about it for the purpose of enabling: (i) the exchange of information between independently created programs and other programs (including this one) and (ii) the mutual use of the information which has been exchanged, should contact:

Site Counsel
IBM Corporation
P.O. Box 12195
3039 Cornwallis Road
Research Triangle Park, NC 27709-2195
USA

Such information may be available, subject to appropriate terms and conditions, including in some cases, payment of a fee.

The licensed program described in this document and all licensed material available for it are provided by IBM under terms of the IBM Customer Agreement.

This document is not intended for production use and is furnished as is without any warranty of any kind, and all warranties are hereby disclaimed including the warranties of merchantability and fitness for a particular purpose.

© Copyright IBM Corp. 1989, 1996

Trademarks

The following terms are trademarks of the IBM Corporation in the United States or other countries or both:

ACF/VTAM
Advanced Peer-to-Peer Networking
AIX
AnyNet
Application System/400
APPN
AS/400
BookManager
CICS
CICS/MVS
DisplayWrite
GDDM
IBM
IBMLink
IIN
Library Reader
Micro Channel
MVS/ESA
NetView
OfficeVision
OfficeVision/400
OS/2
OS/400
PS/2
RS/6000
SAA
Series/1
SP
System/370
System/390
S/390
ThinkPad
VM/ESA
VTAM
400

PC Direct is a trademark of Ziff Communications Company and is used by IBM Corporation under license.

UNIX is a registered trademark in the United States and other countries licensed exclusively through X/Open Company Limited.

C-bus is a trademark of Corollary, Inc.

Microsoft, Windows, and the Windows 95 logo are trademarks or registered trademarks of Microsoft Corporation.

Other company, product, and service names, which may be denoted by a double asterisk (**), may be trademarks or service marks of others.

Glossary

A

access control. In computer security, ensuring that the resources of a computer system can be accessed only by authorized users in authorized ways.

access control profile. A list of the access privileges assigned to users and groups for a particular network resource in a domain.

access priority. In the IBM Token-Ring Network, the maximum priority a token can be given by the adapter for transmission.

ACF/NCP. Advanced Communication Function for the Network Control Program.

ACF/TCAM. Advanced Communication Function for the Telecommunications Access Method.

ACF/VTAM. Advanced Communication Function for the Virtual Telecommunications Access Method.

adapter. A part that electrically or physically connects a device to a computer or to another device.

Advanced Communications Function (ACF). A group of IBM licensed programs, principally VTAM, TCAM, NCP, and SSP, that use the concepts of Systems Network Architecture (SNA), including distribution of function and resource sharing.

Advanced Communication Function for the Telecommunications Access Method (ACF/TCAM). A network host communication program.

Advanced Communication Function for the Network Control Program (ACF/NCP). A network host communication program.

Advanced Communication Function for the Virtual Telecommunications Access Method (ACF/VTAM). A network host communication program.

Advanced Peer-to-Peer Networking (APPN). An extension to SNA featuring (a) greater distributed network control that avoids critical hierarchical dependencies, thereby isolating the effects of single points of failure; (b) dynamic exchange of network topology information to foster ease of connection, reconfiguration, and adaptive route selection; (c) dynamic definition of network resources; and (d) automated resource registration and directory lookup. APPN extends the LU 6.2 peer orientation for end-user services to network control and supports multiple LU types, including LU 2, LU 3, and LU 6.2.

Advanced Peer-to-Peer Networking (APPN) end node. A node that provides a broad range of end-user services and supports sessions between its local control point (CP) and the CP in an adjacent network node. It uses these sessions to dynamically register its resources with the adjacent CP (its network node server), to send and receive directory search requests, and to obtain management services. An APPN end node can also attach to other end nodes.

Advanced Peer-to-Peer Networking (APPN) network. A collection of interconnected network nodes and their client end nodes.

Advanced Peer-to-Peer Networking (APPN) network node. A node that offers a broad range of end-user services and that can provide the following:

- Distributed directory services, including registration of its domain resources to a central directory server
- Topology database exchanges with other APPN network nodes, enabling network nodes throughout the network to select optimal routes for LU-LU sessions based on requested classes of service
- Session services for its local LUs and client end nodes
- Intermediate routing services within an APPN network

Advanced Peer-to-Peer Networking (APPN) node. An APPN network node or an APPN end node.

advanced program-to-program communication (APPC). (1) The general facility characterizing the LU 6.2 architecture and its various implementations in products. (2) Sometimes used to refer to the LU 6.2 architecture and its product implementations as a whole, or to an LU 6.2 product feature in particular, such as an APPC application programming interface.

© Copyright IBM Corp. 1989, 1996

AID key. A control key that generates a host attention interrupt.

alert. (1) A message sent to a management services focal point in a network to identify a problem or an impending problem. (2) In SNA management services (SNA/MS), a high priority event that warrants immediate attention.

alias name. A name that is defined in one network to represent a logical unit name in another interconnected network. The alias name does not have to be the same as the real name; if these names are not the same, translation is required.

American National Standard Code for Information Interchange (ASCII). A character set standard established by the American National Standards Institute, using a set of 7-bit binary-coded characters (8 bits including parity check). ASCII is used for information interchange among data processing systems, data communication systems, and associated equipment. An extended, 8-bit version of this code is used in the personal computer. It consists of control characters and graphic characters in addition to the 7-bit ASCII characters. See also *extended binary-coded decimal interchange code*.

American National Standards Institute (ANSI). An organization consisting of producers, consumers, and general interest groups, that establishes the procedures by which accredited organizations create and maintain voluntary industry standards in the United States. (A)

ANSI. American National Standards Institute.

AnyNet product family. A group of IBM products that implement the multiprotocol transport networking (MPTN) architecture, thus enabling application programs to communicate independently of the underlying network transport protocol.

API. Application programming interface.

APL. A programming language requiring the use of a special keyboard to represent various operator symbols.

APPC. Advanced program-to-program communications.

application. A collection of software components used to perform specific types of user-oriented work on a computer.

application program. (1) A program written for or by a user that applies to the user's work, such as a program that does inventory control or payroll. (2) A program used to connect and communicate with stations in a network, enabling users to perform application-oriented activities.

application programming interface (API). (1) The set of programming language constructs or statements that can be coded in an application program to obtain the specific functions and services provided by an underlying operating system or service program. (2) In VTAM, the language structure used in control blocks so that application programs can reference them and be identified to VTAM.

application transaction program. A program written for or by a user to process the user's application; in an SNA network, a user of a type 6.2 logical unit. Contrast with *service transaction program*.

APPN. Advanced Peer-to-Peer Networking.

APPN end node. See *Advanced Peer-to-Peer Networking (APPN) end node*.

APPN network node. See *Advanced Peer-to-Peer Networking (APPN) network node*.

ASCII (American National Standard Code for Information Interchange). The standard code, using a coded character set consisting of 7-bit coded characters (8 bits including parity check), that is used for information interchange among data processing systems, data communication systems, and associated equipment. The ASCII set consists of control characters and graphic characters. (A)

ASYNC. Asynchronous.

asynchronous (ASYNC). (1) Pertaining to two or more processes that do not depend upon the occurrence of specific events such as common timing signals. (T) (2) Without regular time relationship; unexpected or unpredictable with respect to the execution of program instructions.

Asynchronous Data Link Control (ASYNCH). A discipline for managing asynchronous, serial-by-bit information transfer over a line connection.

asynchronous transmission. A data communication method wherein character strings of variable length are transmitted serially at a variable transmission rate. Each character or defined block of characters has a constant transmission duration.

atom. Represents a character string that has been reduced to a unique integer value.

attention identifier. See *AID key*.

attachment. A communication link used by Personal Communications to connect a personal computer to a host system, consisting of an adapter and controlling software.

audit trail. A history of network activity on a server.

AUTOEXEC.BAT file. In the DOS operating system, a batch file that resides in the root directory of the boot drive. AUTOEXEC.BAT contains commands that DOS executes every time the PC is booted.

automatic access utility. A utility that allows you to create and edit the files that control the automatic-dial, automatic-logon, and modem control programs.

autoskip. A field defined as protected **and** numeric. Causes the cursor to skip to the next unprotected field.

B

backup diskette. A diskette that contains information copied from a Personal Communications diskette.

base-color mode. The mode in which a terminal operates if the host system does not supply color information.

Basic Input/Output System (BIOS). Code that controls basic hardware operations, such as interactions with diskette drives, hard disk drives, and the keyboard.

binary. Pertaining to the base two system of numbers. The binary digits are 0 and 1. Executable files are generally in binary format rather than the character string format that text files are composed of.

BIOS. (1) Basic Input/Output System. (2) See also *NetBIOS*.

bis. German (Federal Republic) preliminary standard.

bit map. A representation of an image by an array of bits.

C

Caps Lock. The personal computer keyboard mode entered after the **Caps Lock** key is pressed. This mode is indicated by a capital A in the operator information area (OIA). When the **Shift key** is pressed while in this mode, **Caps Lock** is temporarily discontinued and the OIA indicator changes. Pressing the **Shift** key again returns the Caps Lock mode.

character cell. The maximum physical boundary of a character on a display screen.

character set. A finite group of characters defined for a keyboard or output device.

CICS/VS. Customer Information Control System for Virtual Storage.

code page. (1) An assignment of graphic characters and control function meanings to all code points; for example, assignment of characters and meanings to 256 code points for an 8-bit code, assignment of characters and meanings to 128 code points for a 7-bit code. (2) A particular assignment of hexadecimal identifiers to graphic characters.

Common Programming Interface for Communications (CPI-C). An evolving application programming interface (API), embracing functions to meet the growing demands from different application environments and to achieve openness as an industry standard for communications programming. CPI-C provides access to interprogram services such as (a) sending and receiving data, (b) synchronizing processing between programs, and (c) notifying a partner of errors in the communication.

configuration. (1) The manner in which the hardware and software of an information processing system are organized (2) In Personal Communications, the arrangement of personal computers connected to one or more host systems by one or more attachment types.

configuration file. A file that specifies the characteristics of a system device or network.

continuous carrier. A characteristic of the modem used in an SDLC type of attachment; frequency capable of being modulated or impressed with a second (informative carrier) signal.

control unit. A device that manages the flow of data between personal computers used with Personal Communications and a host system.

conversation. A logical connection between two transaction programs using an LU 6.2 session. Conversations are delimited by brackets to gain exclusive use of a session.

CP. Control point.

CPI-C. Common Programming Interface for Communications.

CP name. A network-qualified name of a control point (CP), consisting of a network ID qualifier identifying the network (or name space) to which the CP's node belongs, and a unique name within the scope of that network ID identifying the CP. Each APPN or LEN node has one CP name, assigned to it at system-definition time.

CSD. Corrective service diskette.

Customer Information Control System for Virtual Storage (CICS/VS). An IBM licensed program that can be used in a communications network.

customization. The process of configuring one or more personal computers connected to a host system by the SDLC, LAN, ASYNCH, X.25, DFT, or other attachment. Customization precedes Personal Communications installation and includes the definition of the sessions to be carried out by Personal Communications.

D

default. A value, attribute, or option that is assumed when no differing selection is made.

definition file. A file loaded by default that contains keyboard and screen color characteristics that can be adapted for a particular session. The lines of a definition file must be coded according to a strict layout.

delimiter. In the IBM Token-Ring Network, a bit pattern that defines the limits of a frame or token.

dependent LU. See *SSCP-dependent LU*.

dependent LU requester (DLUR). An APPN end node or an APPN network node that owns dependent LUs, but requests that a dependent LU server provide the SSCP services for those dependent LUs.

dependent LU server (DLUS). An APPN network node that provides SSCP services for a dependent LU in its own or another APPN network. Contrast with *dependent LU requester*.

DFT. See *distributed function terminal*.

diacritic key. A key that allows a character to be entered without the cursor position being changed. When you enter an accent mark or a tilde, for example, the cursor does not advance to the next position until you enter the corresponding alphabetic character.

dial-up line. See *switched line*.

direct memory access (DMA). The system facility that allows a device on the Micro Channel bus to get direct access to the system or bus memory without the intervention of the system processor.

distributed function terminal (DFT). A terminal that supports multiple concurrent logical terminal sessions.

distributed function terminal attachment. The connection of a personal computer with an IBM 3174 or 3274 Control Unit using a coaxial cable and software that provides DFT capabilities.

directory. A named hierarchical grouping of files in a file system.

DLUR. Dependent LU requester.

DLUS. Dependent LU server.

DMA. See *direct memory access*.

domain. A set of servers that allocate shared network resources within a single logical system.

DOS session. A session in which a personal computer operates as a stand-alone computer, running under Disk Operating System (DOS). See *host session*.

download. The transfer of a file from a host system to a personal computer.

dynamic data exchange (DDE). A protocol that allows applications to exchange data.

E

EBCDIC. See *extended binary-coded decimal interchange code*.

ECF. See *Enhanced Connectivity Facilities*.

EGA. See *enhanced graphics adapter*.

EHLLAPI. See *Emulator High-Level Language Application Programming Interface*.

EMM. See *Expanded Memory Manager*.

EMS. See *Expanded Memory Specification*.

emulator. A program that allows a device to operate as if it were a different type of device. Personal Communications, for example, allows supported personal computers and printers to operate as if they were 3270-series or 5250-series workstations.

Emulator High-Level Language Application Programming Interface (EHLLAPI). A programming interface that permits workstation-based programs to access host computer presentation space.

end node (EN). See *Advanced Peer-to-Peer Networking (APPN) end node* and *low-entry networking (LEN) end node*.

Enhanced Connectivity Facilities (ECF). An IBM communication utility that provides the ability to share resources between workstations and host systems.

enhanced graphics adapter (EGA). An adapter, such as the IBM Enhanced Graphics Adapter, that provides high-resolution graphics, allowing the use of a color display for text processing as well as graphics applications.

EOF. End of Field

EOT. End of Text

error log. A file that stores error information for later access.

Ethernet. A 10-Mbps baseband local area network that allows multiple stations to access the transmission medium at will without prior coordination, avoids contention by using carrier sense and deference, and resolves contention by using collision detection and delayed retransmission. Ethernet uses carrier sense multiple access with collision detection (CSMA/CD).

exit function. A function that allows the user to switch from a host session to a DOS session. The key sequence for exit is **Ctrl+End**.

Expanded Memory Manager (EMM). A standard device driver that manages expanded memory in 16-KB logical pages. The EMM maps a set of logical pages into a page frame using the physical address space that is available in memory above 640 KB, storing the map into conventional memory. The application then accesses the expanded memory thus created as though it were conventional memory.

Expanded Memory Specification (EMS). A specification for accessing memory above the conventional DOS memory address space, 0–640 KB. See *Expanded Memory Manager*, *LIM EMS 3.2*, and *LIM EMS 4.0*.

extended binary-coded decimal interchange code (EBCDIC). The standard code, using a character set consisting of 8-bit coded characters, used by Personal Communications for information interchange between personal computers and a host system. See also *American National Standard Code for Information Interchange*.

extended-color mode. The mode in which a terminal operates if the host system supplies color information.

extended error code. An 8-byte data string returned by **Query System** generated by an internal system error that is used by service personnel for diagnosis.

extended memory. Memory above 1 MB that can be accessed and used by 80286 and 80386** (or greater) CPUs to run applications in protected mode. PC DOS does not normally access memory above 640 KB. This memory is useful only for applications that are written specifically to use extended memory. Successful use of extended memory by an application usually requires the use of an 80386 or greater CPU, which provides machine instructions to handle the use of extended memory.

external resource. A file, directory, or device supplied by a server outside the current domain.

F

field. (1) An area in a record or panel used to contain data. (2) In the IBM 3270 data stream, a group of consecutive positions on a presentation space having similar characteristics that are defined by a field attribute byte at the beginning of the field.

field delimiters. Symbols (often brackets) that indicate the limits of a data entry field.

file mode. In VM/CMS, the third field of the file identifier, which indicates the assigned virtual disk wherein the file resides.

file type. In VM/CMS, the second field of the file identifier. The file type can be arbitrary, or of significance to the system (for example, SCRIPT, LIST3270, and NOTEBOOK file types).

fixed disk. See *hard disk*.

flag. A character or bit sequence that marks an occurrence or boundary, such as the end of a word or the beginning or end of a data transmission block.

frame. A data structure (data frame) composed of fields meeting the field specifications of a type of communication protocol. Frames are used to control data transfer across a data link.

In SDLC, a frame is a sequence of bits delimited by an opening and closing flag. In X.25 packet switching data networks, frames are composed of 8-bit byte sequences delimited by beginning and ending flags; the frames in X.25 control various functions, data transfer, and transmission checking.

G

gateway. A station in a local area network through which a connection to a host system or a separate network is established.

gateway status utility. A utility that allows a user to check the status of sessions in a gateway network.

GDDM. See *Graphical Data Display Manager*.

GDDM-PCLK. A personal computer application program that supports host GDDM graphics applications. This application requires an LLAPI interface for PC/3270.

Graphical Data Display Manager (GDDM). An IBM host function that processes text and graphics for output to a display, printer, or graphic output device.

H

hard disk. A rigid-magnetic disk such as the internal disks used in the system units of personal computers and in external hard disk drives (also known as fixed disks).

High-Level Language Application Programming Interface (HLLAPI). A software product that supports interaction between a host program and an application program running on a personal computer in terminal emulation (usually 3270 terminal emulation).

High-Performance Routing (HPR). An addition to APPN that enhances data-routing performance and session reliability.

HLLAPI. See *High-Level Language Application Programming Interface*.

host address. A LAN address used by the host controller.

host code page. The character code page used by the host system to which a gateway connects.

host print. A printer session on a local personal computer directed by the host system.

host profile. A configuration profile that identifies a gateway by name, and establishes LU addresses and types for connected logical units.

host session. A logical connection that enables a personal computer to communicate with a host system. A session can be identified by LU address, LT number, or session ID. See *DOS session*. See also *logical terminal*.

host short name. See *short name*.

host system. In Personal Communications, the computer linked to one or more personal computers by the SDLC, LAN, ASYNCH, X.25, or DFT attachment.

hot key. A keystroke or keystroke combination that initiates the hotkey function. See *hotkey function*.

hotkey function. A function that allows you to switch to the next logical terminal or DOS, on whichever screen it last appeared, without exiting the current application.

HPR. High-Performance Routing.

I

IBM NCP Packet Switching Interface (NPSI). A host program used for interconnecting systems using switched lines. See also *switched line*.

IBM PC Network. A local area network providing peer-to-peer communication among IBM personal computers, allowing them to share resources. It utilizes carrier sense multiple access/collision detect (CSMA/CD) protocol and supports a data transmission rate of 2 million bits per second. Broadband and baseband versions are available.

IBM Token-Ring Network. A general-purpose baseband token-ring local area network for interconnecting information processing equipment at a local site. It uses a token-ring access protocol and supports a data rate of either 4 or 16 million bits per second. It conforms to the IEEE 802.5 (token-ring) and IEEE 802.2 (logical link control) standards.

IBM X.25 NCP Packet Switching Interface Program. A network host communication product that allows workstations using an IBM 3725 or IBM 3720 communication controller to connect to a ITU-TS X.25 recommendation packet-switching data network.

idles. In a token-ring network, the signals sent when neither frames nor tokens are being transmitted.

IEEE. See *Institute of Electrical and Electronics Engineers*.

IEEE 802.2. An IEEE standard for logical link control in local area networks.

initial program load (IPL). The initialization procedure that starts an operating system, or the process of loading programs and preparing a system to run jobs.

installation. In Personal Communications, the process of loading microcode from the Personal Communications diskettes.

Institute of Electrical and Electronics Engineers (IEEE). An organization that establishes and promotes standards in related industries.

integrated services digital network. A digital end-to-end telecommunication network that supports multiple services including, but not limited to, voice and data.

interleave. In Personal Communications, to arrange parts of a transmission sequence so that they are interspersed with parts of one or more other transmission sequences of the same nature, with each sequence retaining distinct meaning and identity. See also *packet-switching data network* and *X.25 Recommendation*.

International Telecommunication Union (ITU). The specialized telecommunication agency of the United Nations, established to provide standardized communication procedures and practices, including frequency allocation and radio regulations worldwide.

interrupt level. A number assigned to an interrupt to indicate priority. The interrupt with the lowest number has the highest priority.

IPL. See *initial program load*.

ISDN. Integrated services digital network.

ITU-T. See *ITU-TS*.

ITU-TS. International Telecommunication Union - Telecommunication Standardization Sector. The part of the International Telecommunication Union (ITU) that is reponsible for developing recommendations for telecommunications.

J

jump. To start the jump function.

jump function. A switch to the logical terminal session specified.

K

key assignment. The character, numeral, symbol, or function generated when a keyboard key is pressed. All keys have default assignments that can be customized.

keyboard definition. Definitions of keyboard keys as stored on one of the Personal Communications diskettes.

keyboard template. An overlay placed on a keyboard to explain the function of each key.

L

LAN. See *local area network*.

leased line. See *nonswitched line*.

LEN. Low-entry networking.

LEN node. A node that supports independent LU protocols but does not support CP-CP sessions. It may be a peripheral node attached to a boundary node in a subarea network, an end node attached to an APPN network node in an APPN network, or a peer-connected node directly attached to another LEN node or APPN end node. See also *low-entry networking (LEN) end node*.

LIM EMS 3.2. An expanded memory specification agreed to in 1984 by the computer software manufacturers Lotus**, Intel**, and Microsoft** to access memory above the DOS conventional memory area, 0–640 KB, using an EMM device driver. LIM EMS 3.2 allows an application to store up to 8 MB of data in expanded memory, in 512 logical pages of 16 KB. The EMS 3.2 expanded memory manager maps up to 64 KB of expanded memory in the PC BIOS memory area. See also *LIM EMS 4.0* and *Expanded Memory Manager*.

LIM EMS 4.0. An extended expanded memory specification (EEMS) pioneered by AST** Research Corporation as an extension to LIM EMS 3.2 to permit expanded memory to be used for directly executing programs through multitasking, and to expand the areas accessible for mapping expanded memory beyond the conventional memory barrier, up to 1024 KB. The EEMS was further improved and defined by agreement of Lotus, Intel, and Microsoft corporations to better support windowing and multitasking operating environments. With appropriate hardware support, LIM EMS 4.0 supports up to 32 MB of expanded memory. Its EMM can create page frames up to 896 KB, and up to 2048 logical pages of 16-KB memory.

line speed. The speed at which data is transferred over an analog (telephone) line. Line speeds depend on the quality of the line.

local area network (LAN). (1) A computer network located on a user's premises within a limited geographical area. Communication within a local area network is not subject to external regulations; however, communication across the LAN boundary may be subject to some form of regulation. (T) (2) A network in which a set of devices are connected to one another for communication and that can be connected to a larger network. (3) See also *Ethernet* and *token ring*.

local copy. A printer session initiated by a personal computer user or host that reproduces a presentation space with all supported graphics.

local LU. A logical unit not distributed over the LAN, but controlled by a gateway personal computer. This is normally a physical device such as a workstation, printer, or terminal.

logical terminal (LT). (1) A terminal with a name related to one or more physical terminals.
(2) The definition of a specific 3270 terminal emulation session. See also *host session*.

logical terminal ID. See *logical terminal identifier*.

logical terminal identifier (LT ID). An identifier for the LU type specified in the gateway host profile. In Personal Communications, up to 8 (unchangeable) IDs can be displayed. See *session ID*.

logical terminal number. A number used to identify DFT host sessions. A 3270 control unit controls some number of sessions with the host. The control unit then assigns from 1 to 5 of these sessions to a particular coaxial connection and assigns each session an LT number from 1 to 5.

logical unit (LU). A type of network accessible unit that enables users to gain access to network resources and communicate with each other.

logon. The process of accessing a domain and assuming a user ID.

LT. See *logical terminal*.

LU. Logical unit.

LU 2. A type of LU for an application program that communicates with a single display workstation in an interactive environment, using the SNA 3270 data stream.

LU 3. A type of LU for an application program that communicates with a single printer, using the SNA 3270 data stream.

LU 6.2. A type of LU that supports sessions between two applications in a distributed data processing environment using the SNA general data stream, which is a structured-field data stream, or a user-defined data stream.

LU address. In Personal Communications, a number from 02 to 254 assigned by the host to represent the remote partner in an SNA session.

M

MAN. Metropolitan area network.

mantissa. The decimal part of a common logarithm.

mark. A symbol or sequence of symbols that indicate the beginning or end of a field, word, data item, or data set.

menu. A list of available operations. You select which operation you want from the list.

messaging name. A name under which messages can be received.

metropolitan area network (MAN). A network formed by the interconnection of two or more networks which may operate at higher speed than those networks, may cross administrative boundaries, and may use multiple access methods. (T) Contrast with *local area network (LAN)* and *wide area network (WAN)*.

modem. A serial data translator that converts digital signals into analog signals at transmission, and on reception, converts analog signals back into digital signals. Modems are used primarily for telephonic computer communication. Synonymous with modulator/demodulator.

multiplexer (mux). A device capable of interleaving events of two or more activities, or of spreading the events of an interleaved sequence of the multiple activities.

mux. See *multiplexer*.

MVS. See *Operating System/Virtual Storage Version 2*.

N

NA. Not applicable. When this appears in a calling parameter position, it means that PC400 EHLLAPI does not require this parameter to perform the specific function.

NCB. See *network control block*.

netID. See *network identifier*.

NetBIOS. Network Basic Input/Output System. In Personal Communications, an interface for application programs (API) between a LAN adapter and a token-ring network.

netname. The name used to identify a shared resource on the network.

network. (1) An arrangement of nodes and connecting branches. (T) (2) A configuration of data processing devices and software connected for information interchange. (3) A group of nodes and the links interconnecting them.

network accessible unit (NAU). A logical unit (LU), physical unit (PU), control point (CP), or system services control point (SSCP). It is the origin or the destination of information transmitted by the path control network. Synonymous with *network addressable unit*.

network address. (1) According to ISO 7498-3, a name, unambiguous within the OSI environment, that identifies a set of network service access points. (2) In a subarea network, an address, consisting of subarea and element fields, that identifies a link, link station, physical unit, logical unit, or system services control point. Subarea nodes use network addresses; peripheral nodes use local addresses or local-form session identifiers (LFSIDs). The boundary function in the subarea node to which a peripheral node is attached transforms local addresses or LFSIDs to network addresses and vice versa. Contrast with *network name*.

network addressable unit (NAU). Synonym for *network accessible unit*.

network administrator. A person who manages the use and maintenance of a network.

network application program. In the IBM Token-Ring Network, a program used to connect and communicate with adapters on a network, enabling users to perform application-oriented activities and to run other application programs.

network control block (NCB). A part of the network control program that controls the resources used by the communication network in a LAN attachment.

next-logical-terminal (next-LT) function. A function that allows the user to switch from one logical terminal to another. The key sequence for next-LT is **Alt+Esc**.

network name. The symbolic identifier by which users refer to a network accessible unit, a link, or a link station

within a given subnetwork. In APPN networks, network names are also used for routing purposes. Contrast with *network address*.

network node (NN). See *Advanced Peer-to-Peer Networking (APPN) network node*.

network node server. An APPN network node that provides network services for its local LUs and client end nodes.

next-session-active-screen (next-SAS) function. A function that allows the user to switch to the next logical terminal or to DOS while keeping the same screen in use. The key sequence for next-SAS is **Ctrl+Esc**.

node. (1) In a network, a point at which one or more functional units connect channels or data circuits. (I) (2) Any device, attached to a network, that transmits and receives data. (3) An endpoint of a link or a junction common to two or more links in a network. Nodes can be processors, communication controllers, cluster controllers, or terminals. Nodes can vary in routing and other functional capabilities.

non-return-to-zero inverted encoding (NRZI). A data encoding method that ensures correct synchronization of information in an analog data stream transmission.

nonswitched line. A communication line (such as is used in the SDLC attachment) that is permanently connected and does not require dialing to establish communication. Contrast with *switched line*.

NPSI. See *IBM NCP Packet Switching Interface Program*.

NRZI. See *non-return-to-zero inverted encoding*.

NUL. A transmission control character used as a filler or for sequence control in network communication.

Num Lock. The keyboard mode entered after the **Num Lock** key is pressed. When the **Shift** key is pressed while in this mode, Num Lock is temporarily discontinued.

O

OIA. See *operator information area*.

OIA indicator. Characters or symbols in the operator information area providing information about network, workstation, gateway, or interface status. See also *operator information area*.

operator information area (OIA). The bottom line of a session window that shows information on status and Personal Communications connections.

Operating System/Virtual Storage Version 2 (OS/VS2). A set of commands, subcommands, and operands recognized by the host computer. Synonymous with MVS.

P

packet. A discrete unit of information including addressing and sequence information that can be sent interleaved with other packets of the same and other transmission sequences. Data sent by packet switching protocols, such as the X.25 protocol, do not always arrive in the order sent or even by the same routing on a PSDN.

packet assembler/disassembler (PAD). A program that codes data into packets for transmission and reassembles received packets into the original data format. See also *packet*, *packet-switching data network*.

packet-switching data network (PSDN). A data transmission system consisting of one or more host systems and one or more network stations that communicates using packets of information. The data is sent in interleaved packets to distribute the flow of information and maximize the data transmission capabilities of the network. X.25 is a packet-switching data network communication protocol. See *X.25 network*.

PAD. See *packet assembler/disassembler*.

parity bit. A binary digit appended to a group of binary digits as needed to make the sum of all the digits either odd (odd parity) or even (even parity).

PC Network. See *IBM PC network*.

PCSDIAL. A program that automatically dials a host number, permitting a fast connection.

permanent virtual circuit (PVC). A session assigned to a dedicated line telephonic link. See *switched virtual circuit*.

physical unit (PU). The component that manages and monitors the resources (such as attached links and adjacent link stations) associated with a node, as requested by an SSCP via an SSCP-PU session. An

SSCP activates a session with the physical unit in order to indirectly manage, through the PU, resources of the node such as attached links. This term applies to type 2.0, type 4, and type 5 nodes only.

physical unit identifier (PUID). In the gateway status utility, five hexadecimal digits used to identify the network station to the gateway.

PIU. Path information unit.

pooled LUs. Logical units that share host sessions in a common pool to save system resources.

POR. See *power-on reset function*.

port number. In DFT attachment, the logical ports assigned to a terminal by a control unit.

power-on reset (POR) function. A function that allows the user to reset all logical terminals. The key sequence for POR is **Ctrl+Pause** using the Enhanced or Space Saving keyboards. Otherwise, the sequence is **Ctrl+F2**.

preallocated LUs. Logical units only available to a specified network station.

presentation space. The host display space for the window.

presentation space position parameter. One of the four parameters that you must specify for some EHLLAPI functions. A position in the presentation space from 1 to 3564.

printer utility. A utility that allows users to check the status of the printers in their network.

private application. An application maintained for use only on one computer or user, that is not available on the network for other users.

program operator. The EHLLAPI program that performs and monitors activities in a workstation presentation space.

programmed symbol set (PS). A set of fonts that can be system-defined or defined by the user and to which a code can be assigned.

protected field. A field that holds data for viewing; the data cannot be changed (at the current screen) by the user.

protocol. A specification for the format and timing of data exchanged between communicating systems. Also, the set of rules governing the operation of units of the communication system to facilitate communication.

PSDN. See *packet-switching data network*.

PSID. Presentation Space Identifier; a short one-character or one-letter name of the presentation space.

PU. Physical unit. See also *physical unit identifier*.

public application. An application shared among users on a network.

PUID. See *physical unit identifier*.

PVC. See *permanent virtual circuit*.

Q

queue. A list of pending tasks for a computer or server to execute in order.

R

redefinition file. See *definition file*.

refresh function. The function that refreshes the current screen. The refresh function is useful if a DOS application has overwritten the contents of a host application screen. The key sequence for refresh is **Alt+Del**.

request. A message unit that signals initiation of a particular action or protocol. For example, Initiate-Self is a request for activation of an LU-LU session.

requester. A computer that accesses shared network resources through a server.

resource. A directory (files resource) or device used by computers on a network.

response time monitor. A function that measures and displays the host response time

resume-DOS. The function that allows the DOS session to run in the background. The key sequence for resume-DOS is **Alt+R**. (In the Netherlands, the sequence is **Ctrl+R**.)

RS-232C. A standard established by the Electronic Industries Association for direct linkage for serial data

transfer between a computer and peripheral equipment, such as a modem or printer.

RSAP. Remote service access point. See *service access point*.

run book. A supplemental guide, controlled by a system administrator, that describes the implementation and usage of a specific system configuration.

S

SAP. See *service access point*.

SAS. See *session active screen*.

SDLC. See *Synchronous Data Link Control*.

SDLC command. The control information in the C-field of the link header, sent from a primary station to a secondary station.

Server-Requester Programming Interface (SRPI). An IBM application programming interface (API) used by requester and server programs to communicate with the personal computer or host routers.

service access point (SAP). The gateway address of the controller. An SAP provides a point to link the controller to the host system.

service coordinator. The person in your organization responsible for answering hardware and software computing questions.

service transaction program. Any IBM-supplied transaction program running in a network accessible unit. Contrast with *application transaction program*.

session. (1) A logical connection between a server and a requester that was initiated by a successful request for a shared resource. See also *host session* and *DOS session*. (2) A logical connection between two network addressable units that can be activated, tailored to provide various protocols, and deactivated, as requested.

session active screen (SAS). The display that is active for the current communication session. See also *next-session-active-screen function.*

session ID. An alphabetic ID (*a* through *h*) assigned by Personal Communications to each session or screen. This applies to all types of host sessions and is used in file transfers. See also *short name*.

shared resource. A directory or device made available to users on a network. A shared resource is attached to a server, but it is not attached to the requesters that use them.

Shift Lock. The personal computer keyboard mode entered after the **Shift Lock** key is pressed. In this mode, the keyboard performs the function printed on the upper half of the keytop. Press the **Shift** key to cancel the Shift Lock mode.

short name. In Personal Communications, a character displayed in column 7 of the operator information area that shows the session ID. See also *session ID* and *operator information area*.

SNA. See *Systems Network Architecture*.

SNA network. The part of a user-application network that conforms to the formats and protocols of Systems Network Architecture. It enables reliable transfer of data among users and provides protocols for controlling the resources of various network configurations. The SNA network consists of network accessible units (NAUs), boundary function, gateway function, and intermediate session routing function components; and the transport network.

source diskette. In a diskette copying procedure, the diskette from which information is read.

SRPI. Server-Requester Programming Interface.

SSCP. System services control point.

SSCP-dependent LU. An LU that requires assistance from a system services control point (SSCP) in order to initiate an LU-LU session. It requires an SSCP-LU session.

SVC. See *switched virtual circuit*.

switched line. A telephonic communication line on which connections are established by dialing. See also *switched virtual circuit*. Contrast with *nonswitched line*.

switched virtual circuit (SVC). (1) An X.25 circuit that is dynamically established when needed. The X.25 equivalent of a switched line. (2) A virtual circuit that is requested by a virtual call. It is released when the virtual circuit is cleared. Contrast with *permanent virtual circuit (PVC)*.

switch-screen function. A function that switches keyboard control to the other screen, if two screens are used. The key sequence for switch-screen is **Alt+Tab**.

Synchronous Data Link Control (SDLC). A discipline for managing synchronous, code-transparent, serial-by-bit information transfer over a line connection. Transmission exchanges can be duplex (in both directions at the same time) or half-duplex (in either direction, one direction at a time) over switched lines or direct lines.

system services control point (SSCP). A component within a subarea network for managing the configuration, coordinating network operator and problem determination requests, and providing directory services and other session services for users of the network. Multiple SSCPs, cooperating as peers with one another, can divide the network into domains of control, with each SSCP having a hierarchical control relationship to the physical units and logical units within its own domain.

Systems Network Architecture (SNA). The description of the logical structure, formats, protocols, and

T

target diskette. In a diskette or storage copying procedure, the diskette onto which information is written.

template. See *keyboard template*.

terminal emulator. See *emulator*.

terminal operator. The human user of a EHLLAPI application program. Contrast with *program operator*.

Time Sharing Option (TSO). A set of commands, subcommands, and operands recognized by the host computer.

token ring. (1) According to IEEE 802.5, network technology that controls media access by passing a token (special packet or frame) between media-attached stations. (2) A FDDI or IEEE 802.5 network with a ring topology that passes tokens from one attaching ring station (node) to another. (3) See also *local area network (LAN)*.

token-ring network. (1) A ring network that allows unidirectional data transmission between data stations, by a token passing procedure, such that the transmitted data return to the transmitting station. (T) (2) A network that uses a ring topology, in which tokens are passed in a circuit from node to node. A node that is ready to send can capture the token and insert data for transmission.

trace size. See *trace table*.

trace table. A storage area that contains the records of all Personal Communications operations. The trace information can either be directed to the standard output destination, or it can be redirected to a file.

transaction program (TP). A program that processes transactions in an SNA network. There are two kinds of transaction programs: application transaction programs and service transaction programs. See also *conversation*.

transferring files. Sending files from a personal computer to a host system or vice versa. See *download* and *upload*.

TSO. See *Time Sharing Option*.

U

UID. See *user identifier*.

unprotected field. A field that is available for the user to enter or modify data.

upload. The transfer of a file from a personal computer to a host system.

user ID. See *user identifier*.

user identifier (UID). A name that uniquely identifies a user on a network or system.

user profile. A file containing values for setting up the user environment, and that can be automatically accessed when a user logs on.

utility programs. Programs that support operations of Personal Communications, such as file transfer and keyboard redefinitions.

V

V.24. A 2400 bps ITU-TS communication protocol.

V.35. A 64 Kbps ITU-TS communication protocol.

valid key. A key that is recognized by the host session.

VGA. See *video graphics adapter*.

video graphics adapter (VGA). A computer adapter that provides high-resolution graphics and a total of 256 colors. See also *enhanced graphics adapter (EGA)*.

virtual machine (VM). A time sharing control program.

VM. See *virtual machine*.

VM/CMS. See *Virtual Machine/Conversational Monitoring System*.

Virtual Machine/Conversational Monitoring System (VM/CMS). A time sharing system control program that manages the resources of an IBM System/370 such that multiple remote terminal users have a functioning simulation of a computing system at their disposal. The Conversational Monitoring System provides general time sharing, development, and problem-solving facilities.

Virtual Telecommunications Access Method (VTAM). A host program for communication using switched lines. See also *switched line*.

virtual route (VR). (1) A path between a data source and a data sink that can be created in various circuit configurations during the transmission of packets or messages. (2) In SNA, a logical connection between two subarea nodes that is physically an explicit route, or a logical connection that is contained entirely within a subarea node. See also *Systems Network Architecture* and *packet-switching data network*.

VR. See *virtual route*.

VS. Virtual storage.

VTAM. See *Virtual Telecommunications Access Method*.

W

WAN. See *wide area network*.

wide area network (WAN). (1) A network that provides communication services to a geographic area larger than that served by a local area network or a metropolitan area network, and that may use or provide public communication facilities. (T) (2) A data communication network designed to serve an area of hundreds or thousands of miles; for example, public and private packet-switching networks, and national telephone networks. (3) Contrast with *local area network (LAN)* and *metropolitan area network (MAN)*.

X

X.21 bis. A preliminary German (Federal Republic) modem communication specification.

X.25 network. A packet-switching data network linked in accordance with ITU-TS recommendation X.25.

X.25 Recommendation. An ITU-TS recommendation for the interface between data terminal equipment using packet switching data networks.

X.400. An electronic mail addressing and address directory control system established by the IEEE, designed to facilitate electronic mailing between otherwise independent data networks.

XID. SNA exchange identifier command. See also *Systems Network Architecture*.

Numbers

3270 numeric field. A display field that accepts only numerics (0–9), a minus sign, a period, a comma, and DUP keyboard entries.

Index

Numerics

3270 Emulation Credit Card 86
3270 passthru 94
3270 session screen printing 45
5250 PCMCIA 95

A

adapters
  3270 Emulation Credit Card 86
  attachments 28
  coax 95
  Ethernet 87
  OEM twinaxial support 12
  preventing conflicts 91
  SDLC 91
  Token-Ring 87
  twinax 97
Advantis (IIN) 92
appearance 53
AS/400
  3270 passthru 94
  configuration examples 101
  device description
    for asynchronous attachments 108
    for twinaxial attachment 105
  error messages 94
  system mode description 104
  system setup 94
asynchronous attachment, AS/400 device description 108
automatically starting sessions 40

B

batch file
  creating 36
  editing 39
  i option 37
  q option 37
  s option 37
  using 35

C

changing
  configuration files 31
  workstation profiles 31
character sequences, unsupported 93
client/server applications
  enabling 71
CMS file printing 45
coax adapters 95
coax attachment, considerations 85
color mapping 53
common services 14
communication check 50x 93
configuration
  changing 32
  creating 28
  default 30, 71
  information 101
  saving 29
configuring
  an emulator session 27
  AS/400 101
  PC400 101
  SNA nodes 71
conflicts, preventing 91
considerations and restrictions
  Advantis (IIN) 92
  attachment via AS/400 system 94
  coax attachment 85
  Home3270 93
  IBM Global Network Connection 92
  LAN via IEEE 802.2 87
  LAN via IPX/SPX 87
  SDLC 90
  TCP/IP attachment 88
  Windows NT 89
  ZipPrint 46
contacting IBM 78
conventions used in this book vii
copylink 48
creating
  a batch file 36
  a macro 61

© Copyright IBM Corp. 1989, 1996

creating *(continued)*
the AS/400 system mode description 104

D

Data Transfer
description 65
icon 4
types of 65
DDE/EHLLAPI 48
default key functions
combined package 118
PC/3270 package 113
PC400 package 116
dependent LU server 9
desktop 33
developer's assistance program 82
device description
AS/400 103
for asynchronous attachments 108
for twinaxial attachments (APPC) 105
DFT attachment, functions not available 86
directories created during installation 83
diskette images 21

E

edit-function restrictions with Home3270 attachment 51
emulator sessions
configuring 27
exiting 40
stopping 40
enabling client/server applications 71
enabling DDE/EHLLAPI 48
end node 71
error messages from the AS/400 system 94
existing batch file 39
exiting sessions 40

F

file transfer 51
fonts 53
form feed options, printing 13
functions not available with DFT attachment 86

G

Global Network 12, 92

H

hiding
the menu bar 55
the tool bar 55
windows 63
Home3270 93
hotspots 56
how to
perform communication check 50x 93

I

i option 37
IBM Global Network Connection considerations 92
IBM service 78
icons, Personal Communications 2
IIN 92
installation
network 19
removing 24
workstation 18
installing Personal Communications
diskette images 21
from a network 19
from a network server 21
on a network server 20
introduction of Personal Communications 1

K

key functions
assignments 113
default 113, 115
description 56
keyboard
file 58
functions 56, 116
setup 58

L

LAN adapter considerations 87
LAN via IEEE 802.2 attachment 87
LAN via IPX/SPX
connection considerations 87

LAN via IPX/SPX *(continued)*
NetWare for SAA attachment 87
licensing agreement 119
line speed
Advantis (IIN) attachment 92
Home3270 attachment 93
SDLC attachment 90

M

machine check 207 85
macro
description 61
functions 56
statements 62
usage 61
management services 14
memory requirements
for Personal Communications 15
for Windows 95 16
messages
OIA 76
page fault 76
mouse
file 60
setup 60
multiple sessions 35

N

NetWare for SAA
gateway attachment 87
network
installing diskette images 21
installing from 21
installing on 20

O

OEM twinaxial adapter support 12
OfficeVision 45
online help 75
Organizer, PC 66

P

passthru 94
pastelink 48
pausing macro recording 62
PC Organizer 66
PCMCIA configuration 86
PCOMM forum 81
PCSWS.EXE 35
PDT 44
PDT files 44
Personal Communications
directories 83
functions 5
icons 2
library 77
overview 5
program folder 2
removing 24
requirements 15
subdirectories 83
pop-up keypad
(poppad) file 59
setup 59
poppad color 59
print screen 43
printer definition
file 44
table 44
printing
description 43
form feed options 13
function 45
PROFS/OV note, calendar, document 45
ZipPrint 45
private subdirectory 21
processing environment 15
PROFS/OV note, calendar, document printing 45

Q

q option 37
quit macro recording select 62

R

receiving data from the host 66
related publications 77
removing Personal Communications 24
requirements
hardware 15
storage 15
workstation 15
running
copylink 48

running *(continued)*
pastelink 48

S

s option 37
sample
AS/400 device description for twinaxial attachment 105
AS/400 device descriptions for asynchronous attachments 108
PC400 configuration 103
saving
configuration information 29
SDLC attachment
considerations 90
performance consideration 90
sending data to the host 65
service, statement 78
sessions
automatically starting 40
configuring 27
exiting 40
icons for 27, 33
IDs for 37
multiple 35
starting 33
starting specific session ID 37
stopping 40
window 33
setting up
a macro 62
the mouse 60
the pop-up keypad 59
the printer 44
sharing
system resources with MPA 91
showing
the menu bar 55
the tool bar 55
windows 63
SNA
management services 14
SNA connection
Data Transfer 65
Software Solutions Center 82
spreadsheet, copying table data 49
starting
configuration setup 28
from the session window 34
starting *(continued)*
macro playing 63
multiple sessions 35
sessions 33
SNA nodes 72
with a batch program 35
workstation profiles from the Start menu 35
stopping
macro playing 63
sessions 40
SNA nodes 73
subdirectories
PDFPDT 84
private 21, 83
Samples 84
system files
AUTOEXEC.BAT 84
CONFIG.SYS 23
Personal Communications 84
SYSTEM.INI 23
WIN.INI 23

T

TCP/IP
connection considerations 88
protocol driver 88
technical assistance 78
Telnet 3270 12
text assist 68
text conventions vii
tool bar
customization 12
setup 54
trademarks 120
transferring
a window's appearance 53
data 65
files 51
trim print 43
twinax adapters 97
twinax attachment, AS/400 device description 105
types of
hotspots 57

U

uninstalling Personal Communications 24
unsupported character sequences 93

using
hotspots 57
PDT files 44
text assist 68
the PC organizer 66
the pop-up keypad 59
the printer 43
the Windows printer driver 44

W

window
appearance 53
setup 54
view 63
Windows NT 12, 89
workstation profile 29, 35
workstations supported by Personal Communications 15

X

XEDIT work-space printing 45

Z

ZipPrint 4, 45

Communicating Your Comments to IBM

Personal Communications
AS/400 and 3270 for Windows** 95
Up and Running
Version 4.1

Publication No. SC31-8205-00

If you especially like or dislike anything about this book, please use one of the methods listed below to send your comments to IBM. Whichever method you choose, make sure you send your name, address, and telephone number if you would like a reply.

Feel free to comment on specific errors or omissions, accuracy, organization, subject matter, or completeness of this book. However, the comments you send should pertain to only the information in this manual and the way in which the information is presented. To request additional publications, or to ask questions or make comments about the functions of IBM products or systems, you should talk to your IBM representative or to your IBM authorized remarketer.

When you send comments to IBM, you grant IBM a nonexclusive right to use or distribute your comments in any way it believes appropriate without incurring any obligation to you.

If you are mailing a readers' comment form (RCF) from a country other than the United States, you can give the RCF to the local IBM branch office or IBM representative for postage-paid mailing.

If you prefer to send comments by mail, use the RCF at the back of this book.

If you prefer to send comments by FAX, use this number:

United States and Canada: **1-800-227-5088**

If you prefer to send comments electronically, use this network ID:

- IBM Mail Exchange: **USIB2HPD at IBMMAIL**
- IBMLink: **CIBMORCF at RALVM13**
- Internet: **USIB2HPD@VNET.IBM.COM**

Make sure to include the following in your note:

Title and publication number of this book
Page number or topic to which your comment applies.

Help us help you!

Personal Communications
AS/400 and 3270 for Windows 95**
Up and Running
Version 4.1

Publication No. SC31-8205-00

We hope you find this publication useful, readable and technically accurate, but only you can tell us! Your comments and suggestions will help us improve our technical publications. Please take a few minutes to let us know what you think by completing this form.

Overall, how satisfied are you with the information in this book?	Satisfied	Dissatisfied

How satisfied are you that the information in this book is:	Satisfied	Dissatisfied
Accurate		
Complete		
Easy to find		
Easy to understand		
Well organized		
Applicable to your task		

Specific Comments or Problems:

Please tell us how we can improve this book:

Thank you for your response. When you send information to IBM, you grant IBM the right to use or distribute the information without incurring any obligation to you. You of course retain the right to use the information in any way you choose.

Name

Address

Company or Organization

Phone No.

Help us help you!
SC31-8205-00

IBM

Cut or Fold
Along Line

Fold and Tape **Please do not staple** Fold and Tape

NO POSTAGE
NECESSARY
IF MAILED IN THE
UNITED STATES

BUSINESS REPLY MAIL

FIRST-CLASS MAIL PERMIT NO. 40 ARMONK, NEW YORK

POSTAGE WILL BE PAID BY ADDRESSEE

Information Development
Department CGMD
International Business Machines Corporation
PO BOX 12195
RESEARCH TRIANGLE PARK NC 27709-9990

Fold and Tape **Please do not staple** Fold and Tape

SC31-8205-00

Cut or Fold
Along Line

IBM®

Part Number: 64H0669

Printed in the United States of America.

64H 669

SC31-82 5-