Personal Communications
AS/400 and 3270 for OS/2

IBM

Up and Running

Version 4.1

SC31-8258-00

Personal Communications
AS/400 and 3270 for OS/2

IBM

Up and Running

Version 4.1

SC31-8258-00

Note

Before using this information and the product it supports, be sure to read the general information under “Notices” on page 129.

First Edition (March 1996)

This edition is a major revision of the *Personal Communications AS/400 and 3270 for OS/2 Version 4.0 User's Guide*, *S85G-8718*, and *Personal Communications AS/400 for OS/2 Version 4.0 User's Guide*, *S85G-8677*. These books are available for ordering.

This edition applies to Version 4.1 of Personal Communications and to all subsequent releases and modifications until otherwise indicated in new editions or technical newsletters. Make sure you are using the correct edition for the level of the product.

Order publications through your IBM representative or the IBM branch office serving your locality. Publications are not stocked at the address below.

IBM welcomes your comments. A form for readers' comments may be provided at the back of this publication, or you may address your comments to the following address:

International Business Machines Corporation
Department CGMD
P.O. Box 12195
Research Triangle Park, North Carolina
27709-2195

When you send information to IBM, you grant IBM a nonexclusive right to use or distribute the information in any way it believes appropriate without incurring any obligation to you.

© **Copyright International Business Machines Corporation 1989, 1996. All rights reserved.**
Note to U.S. Government Users — Documentation related to restricted rights — Use, duplication or disclosure is subject to restrictions set forth in GSA ADP Schedule Contract with IBM Corp.

Contents

About This Book vii
Text Conventions Used in This Book vii
What's in this Package viii

Chapter 1. Welcome to Personal Communications for OS/2 1
Personal Communications Folder 1
Personal Communications Sessions 4
Personal Communications Connections 5
System/390 Connections 5
AS/400 Connections 6
System/3X Connections 7

Chapter 2. Getting Ready to Install Personal Communications 9
Workstation Hardware 9
Storage Requirements 9
Memory Requirements 10
Workstation Software 10

Chapter 3. Installing Personal Communications 11
Installation 11
Diskette Installation 12
Network Installation 14
Installation Command Parameters 15
Removing Personal Communications 15
Migrating to Personal Communications Version 4.1 16

Chapter 4. Configuring Sessions 19
Creating a Configuration 19
Saving Configuration Information 21
Changing Configuration Information 23

Chapter 5. Using Sessions 25
Starting Sessions 25
Starting by Selecting the Session Icon 26
Starting from a Session Window 26
Starting a Workstation Profile from the OS/2 Command Prompt 27
Starting Multiple Sessions 27
Creating a Batch File 28
Using a Batch File 30
Editing an Existing Batch File 31
Starting Multiple Sessions without a Batch File 31
Automatically Starting Sessions 32
Stopping Sessions 32

© Copyright IBM Corp. 1989, 1996

Chapter 6. Managing Sessions 33
Getting Help 33

Chapter 7. Printing 35

Chapter 8. Editing 37
Editing by Linking to OS/2 or Windows Application Programs 37
Confirming the DDE/EHLLAPI Settings 37
Using CopyLink and PasteLink 38
Copying Table Data to a Spreadsheet 38
Copying Marked Data without Dividing It into Cells 39
Copying Lines Containing Only Operational Signs 39
Copying Data in Cells As Text Data 40
Getting Help 40

Chapter 9. Transferring Files 41
Getting Help 42

Chapter 10. Setting Up a Session Window's Appearance 43
Tool Bar Setup 43
Internet WebExplorer Icon 44
Showing or Hiding the Menu Bar and Tool Bar 45
Getting Help 45

Chapter 11. Setting Up and Using the Assist Functions 47
Keyboard/Macro Functions 47
Hotspots Setup 47
Using Hotspots 48
Keyboard Setup 49
Pop-Up Keypad Setup 49
Pop-Up Keypad File 50
Using the Popup Keypad 50
Mouse Setup 50
Macro Setup 51
Using a Macro 51
Creating a Macro 51
Macro Statements 52
Getting Help 52

Chapter 12. Data Transfer (PC400 Only) 53

Chapter 13. Shared Folders (PC400 Only) 55
Starting Shared Folders 55
Releasing Drives 56
Considerations and Restrictions 57
LAN and Switched Line Attachments 57
Commands You Cannot Use 58
Commands with Restrictions 59

Chapter 14. PC Organizer (PC400 Only) 61
Starting the PC Organizer 61
Getting Help 62

Chapter 15. Text Assist (PC400 Only) 63
Text Assist Key Functions 64
Getting Help 65

Chapter 16. Where to Find More Information 67
Online Help 67
How to Use Online Help 67
Messages 68
OIA Messages 68
Personal Communications Library 69
Related Publications 69
Contacting IBM 70
Statement of Service 70
Other Ways to Contact IBM 73

Appendix A. Communication Adapters and Modems 75
Family-1 Communication Adapters 75
Family-2 Communication Adapters 76
Asynchronous Modems 77
Asynchronous Modems (Hayes AutoSync) 78
Synchronous Modems (SDLC) 78
PCMCIA Communication Adapters 79
Installing PCMCIA Support 79
Sequence and Position of the Drivers 80
Personal Communications Device Drivers 80

Appendix B. Attachment Considerations 81
COAX Attachment 81
LAN via IEEE 802.2 Attachment 83
LAN via NetWare for SAA Attachment 84
TCP/IP Connection 86
SDLC Attachment 87
Advantis (IIN) Attachment 89
Hayes AutoSync Attachment 90
IBM Global Network Connection Attachment 90
Home3270 Attachment 91
Attachment via the AS/400 System 92
SNA Considerations 93
Twinaxial Attachment (APPC) 94
Twinaxial Attachment (Console) 95
Asynchronous Console 96
Communication Manager/2 Attachment 96

Appendix C. AS/400 Configuration Examples 99

AS/400 Device Description 101
5250 Sessions through One Link 101
AS/400 System Mode Description 102
AS/400 Device Description for Twinaxial Attachments (APPC) Example 103
AS/400 Device Description for Asynchronous Attachments Example 106
AS/400 Device Description for Hayes AutoSync Attachments Example 110

Appendix D. Coexistence with Communications Manager/2 1.1 115
CONFIG.SYS Updates 115
EHLLAPI and SRPI Applications 116
SEND or RECEIVE from the OS/2 Command Prompt 116
CM/2 Productivity Aids 117
Device Driver Coexistence 117
LUA Connection to CM/2 118
5250-via-CM/2 Attachment 119
CM/2 Keyboard Layout 119
FFST/2 - Error Log/Dump Facility 120

Appendix E. Default Key Function Assignments 121
Default Key Functions for PC/3270 121
Default Key Functions for PC400 124
Default Key Functions for the Combined Package 127

Notices 129
Trademarks 130

Index 131

About This Book

This book describes how to install, configure, and start Personal Communications. After you get Personal Communications up and running and begin to perform various tasks, use online help and the online *Information Notebook* whenever you need additional information. Refer to Chapter 16, “Where to Find More Information” on page 67 for information about online help, the Personal Communications library, and related publications.

This book is for users of both Personal Communications AS/400 V4.1 and Personal Communications AS/400 and 3270 V4.1.

The windows in this book are representative of ones that you might see while working with Personal Communications. Minor variations could occur between what you see on your display and what is in the book.

Text Conventions Used in This Book

This book uses the following text conventions:

UPPERCASE	Uppercase indicates commands, program keywords, and default values. You can enter these values in uppercase or lowercase.
Bold	Bold type indicates the names of window controls, such as lists, check boxes, entry fields, menu choices, and push buttons.
Italics	Italics indicate: Special emphasis in text or a reference citation. Variables that you supply a value for.
Example type	Example type indicates information that the user is instructed to type at a command prompt or in a window.

This book also uses *icons* (pictures) in the text to help you find different types of information.

This icon represents a note, important information that can affect the operation of Personal Communications or the completion of a task.

© Copyright IBM Corp. 1989, 1996

This icon represents a hint or additional information that can help you complete a task.

What's in this Package

The Personal Communications package contains the following:

- Personal Communications diskettes
- OS/2 Access Feature diskettes
- Multi-Protocol Transport Services diskettes
- *Personal Communications Up and Running*
- *Tell Me About OS/2 Access Feature*

Alternatively, the package might contain a CD-ROM, which includes all of these.

OS/2 Access Feature

This product provides a similar communications subsystem to that of Communications Manager/2 (CM/2) with some enhancements but without APPN network node or gateway function; it also includes APPN end node and AnyNet support.

Some of the new functions are:

- 32-bit application program interfaces (APIs) such as APPC and CPI-C
- Dependent LU Requester (DLUR)
- High Performance Routing (HPR)
- AnyNet SNA-over-IP
- AnyNet Sockets-over-SNA

Multi-Protocol Transport Services (MPTS)

This product contains the LAN adapter and protocol support (LAPS) required for connections across LANs.

This support includes:

- NDIS-compliant protocol and network adapter drivers and support for the LAPS application programming interfaces (APIs) NetBIOS and IEEE 802.2
- LAN over coaxial cable support for 3174 Peer Communications
- LAPS support required for connection across LANs and switched and leased (nonswitched) lines
- The support required to configure ISDN and newer WAN adapters
- TCP/IP support required for multi-protocol networking functions

Chapter 1. Welcome to Personal Communications for OS/2

Personal Communications is available in two packages:

Personal Communications AS/400 for OS/2 V4.1, which provides 5250 emulation and connections to AS/400 and S/3*X* systems. This package is referred to as PC400.

Personal Communications AS/400 and 3270 for OS/2 V4.1, which provides 3270 and 5250 emulation and connections to S/390, AS/400, and S/3*X* systems. The components of this combined package are referred to as PC400 and PC/3270.

The information in this book applies to both packages, except where indicated otherwise.

Personal Communications for OS/2 emulates 5250 and 3270 terminals. It has an easy-to-use graphical interface and includes many useful features, such as file transfer, dynamic configuration, and drag-and-drop customization, all in the OS/2 environment. PC400 also provides support for Shared Folders and Data Transfer.

Personal Communications can run alone as a full-function, 32-bit emulation package, or it can be configured with IBM Communications Manager/2 (CM/2) or OS/2 Access Feature for additional connectivity options.

Personal Communications Folder

When you install Personal Communications, the main functions that you can use are displayed as icons. The following example shows the icons for the combined package.

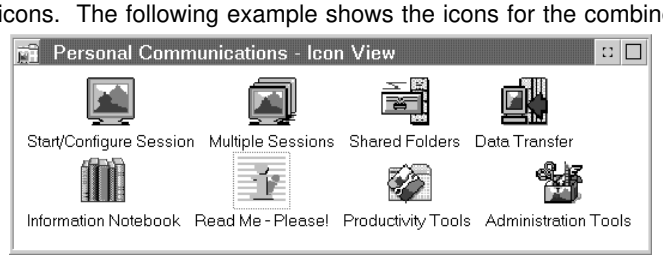

Start/Configure Session

Use this icon to set up the link configuration, as well as other

© Copyright IBM Corp. 1989, 1996

attachment information. You need this information to establish communication with the host system. After you configure the link, you can save the configuration to a workstation profile (***.WS**) and create an icon for that session. Later, you can click the new icon to start the session, using your saved configuration.

Multiple Sessions

Use this icon to create batch files (***.BCH**) that specify multiple host sessions (workstation profiles) or other programs that you want to start concurrently. Again, you can create an icon for each batch file and start the programs just by clicking the icon.

Data Transfer (PC400 only)

Use this icon to transfer data between a workstation and an AS/400 database.

Shared Folders (PC400 only)

Use this icon to share AS/400 folders with a workstation. Using this function provides access to eight virtual workstation drives, allowing the information in the AS/400 folders to be accessed as if it were stored at the workstation.

Administration Tools

These are:

Menu-Bar-Customization Utility
Customize the menu bar in the workstation window

Configuration and Program Options
Add or remove program components or communication drivers, or enable or disable DOS APIs or utilities

Maintenance Aid
Gather service information, or install a corrective service diskette (CSD) or APAR fixes

Trace-Setup Utility
Turn trace functions on and off

Trace-Capture Program
Capture communication-protocol information that passes between workstations and gateways or host systems to resolve communication problems

Adapter-Status Reporter
Display the status of the local area network (LAN) adapter in the workstation

Productivity Tools

These are:

ALMCOPY (PC/3270 only)
Send single or multiple files to or from VM 3270 sessions with the high-speed file transfer program, ALMCOPY. You can also use an asterisk as a wild card in place of characters in file names or file types.

For detailed information, refer to ALMCOPY.DOC in the PCOMOS2 directory.

ACPM (PC/3270 only)
Use ALMCOPY from a window instead of an OS/2 command prompt.

For detailed information, refer to ACPM.DOC in the PCOMOS2 directory. Note that this productivity aid is provided AS IS and is not supported by IBM Service.

EasyREXX for HLLAPI
Create a REXX/HLLAPI program by using menus in a programming window. In this window, you can create or edit a file, record emulator operations into a REXX program, or use interactive programming to develop a REXX program.

For detailed information, refer to PCSRXHLL.DOC in the PCOMOS2 directory.

CMMouse
You can define mouse buttons to perform any sequence of host keystrokes, including PF keys and special emulator control keys. You can also build pop-up menus to control host applications without any changes to those host programs.

Refer to the READ.ME file on the Personal Communications Utility diskette for installation instructions.

CMRTM (PC/3270 only)
Monitor response time for 3270 sessions that use an LUA over CM/2 attachment.

Refer to the READ.ME file on the Personal Communications Utility diskette for installation instructions.

ZipPrint (PC/3270 only)
From a PC/3270 display session, print PROFS or OfficeVision (OV) notes, calendars, documents, CMS files, XEDIT workspaces, and session screens.

Readme - Please!

Use this icon to display supplementary information not contained in the manuals, online help, or the Information notebook.

Introduction

Information Notebook

Personal Communications includes an online *Information Notebook* that provides an interface to all online documentation for Personal Communications. Each push button in the information notebook opens to a page of online information. It includes the following topics:

README
About This Release
What's New

If you have installed all of the product information, the online *Information Notebook* also contains the following topics:

Setup
Preferences
Using Sessions
Transferring Files
AS/400 Utilities
Troubleshooting
Programming
Bibliography
Let's Talk

Personal Communications Sessions

The sessions that Personal Communications provides are logical connections enabling communication between the workstation and host system. The following types of sessions are available:

Display session
Lets you use your workstation as a display terminal connected to the host system.

Printer session
Lets you use a workstation printer as a host-system printer.

Router session
Provides the connection path between an AS/400 system and your workstation for functions such as Data Transfer and Shared Folders.

You can have up to 26 sessions running at once, depending on the Personal Communications package you are using and the amount of memory in your workstation.

Personal Communications Connections

Personal Communications provides a variety of connections to three types of host systems:

S/390

AS/400

S/3X

System/390 Connections

Personal Communications supports the following connections to a System/390:

Interface	Attachment
LAN	LAN via IEEE 802.2 LAN via NetWare** for SAA Telnet3270 3270 via AS/400 (passthru) APPC3270 via LAN
COAX	SNA Distributed Function Terminal Non-SNA Distributed Function Terminal Control Unit Terminal (CUT) 3174 Peer Communication
COM port	Hayes** AutoSync SNA-over-Async IBM Global Network Connection Advantis (IIN) Home3270

SDLC	Synchronous Data Link Control 3270 via AS/400 (passthru) APPC3270 via SDLC
5250	3270 via AS/400 (passthru) (twinax)
CM/2	LUA3270 via CM/2 or OS/2 Access Feature APPC3270 via CM/2 or OS/2 Access Feature

AS/400 Connections

Personal Communications supports the following connections to an AS/400 system:

Interface	Attachment
LAN	LAN via IEEE 802.2 Telnet5250
SDLC	Synchronous Data Link Control
5250	Twinaxial Data Link Control (APPC) Twinaxial Data Link Control (Console)
COM port	SNA-over-ASYNC SNA-over-ASYNC (Console) Hayes AutoSync
CM/2	APPC 5250 via CM/2 or OS/2 Access Feature

System/3X Connections

Personal Communications supports the following connection to a System/36 or System/38:

Interface	Attachment
5250	Twinaxial Data Link Control (Console)

Chapter 2. Getting Ready to Install Personal Communications

Personal Communications supports a wide range of workstations that use different bus architectures and peripheral components. There are several hardware and software requirements, as well as memory and storage requirements, to consider when planning your installation.

The following sections list these requirements and the support for adapters, keyboards, and printers.

Workstation Hardware

Personal Communications supports workstations with the following hardware:

Table 1. Workstation Hardware Requirements

System unit	The recommended system unit has an Intel** 80486 SX** or higher microprocessor.
Display and display adapters	Personal Communications supports display monitors and video adapter cards supported by OS/2.
Keyboards	Personal Communications supports the following keyboards: Enhanced keyboard (101-key, 102-key, and 104-key) Space-saving keyboard Host-connected keyboard (122-key)
Printers	Personal Communications supports the same printers supported by OS/2 as well as those supported by printer definition tables (PDTs). (Refer to the *Personal Communications Reference* for more information.)
Communication adapters	Personal Communications supports the same communication adapters for LAN attachments that are supported by OS/2 or Multi-Protocol Transport Services (MPTS). Refer to Appendix A for a full list of communication adapters supported by Personal Communications.

Storage Requirements

You need at least 13 MB of disk space to install Personal Communications (in addition to the disk space needed for other programs).

© Copyright IBM Corp. 1989, 1996

Memory Requirements

You need at least 3 MB of memory to run Personal Communications (in addition to the memory needed for OS/2). However, the amount you need depends on several factors, including the attachment type, number of sessions, and the use of such programming interfaces as Emulator High Level Language Application Programming Interface (EHLLAPI) and dynamic data exchange (DDE).

Workstation Software

Personal Communications requires that workstations have IBM OS/2 Version 2.1 or later installed.

Depending on your system configuration, the following software also might be required:

- IBM Multi-Protocol Transport Services (included in this package), which provides LAN and TCP/IP protocols
- IBM TCP/IP Version 2.0 for OS/2 Base Kit or later (required for TCP/IP attachments if you don't have MPTS)
- NetWare Client for OS/2 (required for LAN-via-NetWare-for-SAA attachments)
- CM/2 Version 1.1 or later, which provides ISDN and X.25 protocols and supports applications that use SNA APIs
- OS/2 Access Feature (included in this package), described on page viii

Chapter 3. Installing Personal Communications

Personal Communications provides several installation options. You can install Personal Communications:

From diskettes

From CD-ROM

From a network server

By means of the configuration, installation, and distribution (CID) process, using a response file. Response files are described in detail in the *Personal Communications Reference* and the online *Information Notebook*.

Installation

This chapter describes how to install Personal Communications from diskettes and over a network. Refer to the CD-ROM documentation to install from the CD-ROM.

Important!

If you plan to use a CM/2 or OS/2 Access Feature attachment, it is best to install these programs and configure the APPC or LUA interface **before** you configure Personal Communications.

For LUA, create a separate LU in the SNA LUA APIs profile for each Personal Communications session. You need these in addition to those needed for other applications.

For APPC, create an APPC connection (APPC APIs) in CM/2 or OS/2 Access Feature.

© Copyright IBM Corp. 1989, 1996

Diskette Installation

To install Personal Communications on your workstation from diskette:

1. Open an OS/2 window.
2. Insert *IBM Personal Communications Diskette 1 (Installation)* into drive A.
3. From an OS/2 command prompt, type A:INSTALL and press Enter

   The Personal Communications logo window appears, followed by a welcome message.

   If CM/2 or OS/2 Access Feature is already installed, the CM/2 Migration window appears.
4. Click **OK** to continue installation.

   The Target Configuration Selection window appears.
5. Select an option and then click **OK**.
6. Type your name and company and then click **OK**.
7. In the window that appears, confirm your name and company and then click **OK**.
8. If you are installing the combined package, the Emulation Selection window appears; select the type of emulation you want to install.
9. Accept the default drive and directory, ***bootdrive*:\PCOMOS2** or type the drive and directory where you want to install Personal Communications. If you have a previous version of Personal Communications on your workstation, the drive and path for that version appear in the window.
10. Click **OK**.

    The Personal Communications Installation Options window appears and shows the amount of disk space required for each selection.
11. Select an installation option and then click **OK**.

    If you select **Partial Installation**, the Select Components window appears. The amount of disk space required for each option and the amount available on the installation disk displays.

    Select the components you want to install and then click **OK**.

Note

You can add or remove components after installation by using the Configuration and Program Options utility in the Administration Tools folder.

12 In the window that appears, select **Yes** to proceed with the installation.

13 Follow the instructions that appear on the screen and insert the remaining program diskettes.

After all the files are copied to your workstation, a message appears to tell you that the Personal Communications folder has been created.

The Personal Communications folder appears on your desktop.

14 Click **OK** to continue.

15 An informational message might appear to tell you that you need to restart your workstation before you can use Personal Communications; click **OK** to continue.

Note

If at any time you want to install the CMMOUSE and CMRTM utilities, insert the *Personal Communications Utilities diskette* into drive A.

From an OS/2 command prompt, type A:\OS2INST.EXE and then press Enter to install CMMOUSE.

From an OS/2 command prompt, type unpack a:\cmrtm\cmrtm.pak and then press Enter to unpack the files and copy them to the current directory on your hard drive. Type RTMINST.CMD and then press Enter to install CMRTM.

Refer to the READ ME file on the *Personal Communications Utilities* diskette, or to the Productivity Aids description on page 117 for more information about these utilities.

This completes the installation of Personal Communications; if necessary, shut down OS/2 and restart your workstation to start Personal Communications.

Network Installation

If you want to install Personal Communications from a network server, such as an IBM OS/2 LAN server or NetWare server, install the Personal Communications files on the network server first.

Installing Personal Communications Files *on* a Network Server

Personal Communications provides an administrative installation option for installing files on a network server. When you use this option, Personal Communications copies the files from the diskettes or CD-ROM to the network drive and renames them.

To install Personal Communications with the administrative option, enter **INSTALL /A** from an OS/2 command prompt.

Installing Personal Communications *from* a Network Server

If your system administrator has installed the Personal Communications files on a network server, you can install Personal Communications from the server to your workstation.

Although you can install Personal Communications from the network in the same manner as from diskettes or CD-ROM, there is a network installation option that lets you share the program files on a network server with other users. When you use the network option, only a few “private” files are installed on your workstation or on your “home” directory on the server.

To install Personal Communications with the network installation option, enter: **INSTALL /N** from an OS/2 command prompt.

Installation Command Parameters

Enter the INSTALL command from an OS/2 command prompt.

Installation Parameters

To install Personal Communications files on a server, enter:

INSTALL /A

To install Personal Communications files from a server and to keep only the private files either on your workstation or on your "home" directory on the server, enter:

INSTALL /N

To install Personal Communications by using response files (using CID), enter:

INSTALL /R

To remove Personal Communications files from your workstation, enter:

INSTALL /D

To view help for the INSTALL command, enter:

INSTALL ?

Removing Personal Communications

You can remove Personal Communications from your workstation at any time; to do so, enter the following command from an OS/2 command prompt:

INSTALL /D /T=*C:\PCOMOS2*

where:

/D Removes the product files and directories, the folder, the icons, and the entries from system files such as CONFIG.SYS and PCOMOS2.INI.

/T Indicates the path from which the files should be removed. If you do not add this parameter, the files are removed from the path indicated in PCOMOS2.INI.

C:\PCOMOS2
Indicates the drive and directory in which Personal Communications is installed.

Migrating to Personal Communications Version 4.1

You can migrate the following to Personal Communications and use your original configuration information:

Personal Communications for OS/2 Version 4.0
Configuration files of CM/2 Version 1.0 or higher

From Personal Communications V4.0

The installation program erases your existing files, installs the new ones, and updates your workstation profile to the format for Version 4.1.

From CM/2

When migrating from CM/2, you first need to decide if you want to use the communications provided in Personal Communications, or if you want to continue using the communications provided in CM/2 or the OS/2 Access Feature (which is the follow-on product of CM/2).

Some of the reasons you might choose to run Personal Communications over CM/2 or OS/2 Access Feature are that you require connection types such as X.25 or ISDN, or that you want to run APPC or CPI-C applications concurrently with your emulation sessions.

If you want to run Personal Communications over CM/2 or OS/2 Access Feature and you are migrating from CM/2 1.0, first upgrade your CM/2 configuration with OS/2 Access Feature, which is included in this package, and then install Personal Communications. During installation, select the migration choice that uses CM/2 or OS/2 Access Feature LUA or APPC APIs. Refer to the OS/2 Access Feature documentation for more details.

Personal Communications supports all connection types other than ISDN or X.25 that might be defined in a CM/2 configuration.

Installing Personal Communications

If your CM/2 configuration has both 3270 and 5250 sessions defined, you need to migrate to the combined package of Personal Communications.

Personal Communications does not automatically migrate some of the emulator-related settings in your CM/2 configuration information. If you want to migrate that information, you need to use response files. Refer to the *Personal Communications Reference* or the online *Information Notebook* for more information about migrating specific information from CM/2 configurations.

Chapter 4. Configuring Sessions

This chapter describes how to configure a session to have the type of connection, screen size, and other attributes that you want. It also describes how to save the session definitions in a profile.

To communicate with a host system successfully, create a configuration for the connections you want to establish. Personal Communications saves this configuration information in a workstation profile (***.WS**). This profile can be used later by other Personal Communications sessions or to restart this session.

Note

If you are using a 3270 or 5250 PCMCIA card, refer to "Installing PCMCIA Support" on page 79 before continuing configuration.

Configuring PC400

To connect PC400 to an AS/400 system, specific configuration information in the workstation profile must correspond to the information specified at the AS/400 system. Refer to Appendix C, "AS/400 Configuration Examples" on page 99 for more information about creating display, line, and controller descriptions on the AS/400 system.

Creating a Configuration

To configure a session:

1. Double-click the **Start/Configure Session** icon in the Personal Communications folder.

   The logo panel appears, followed by a welcome message.

2. Select **OK** to confirm that you want to start configuration.

© Copyright IBM Corp. 1989, 1996

Configuring Sessions

The Customize Communication window overlays the blank session window.

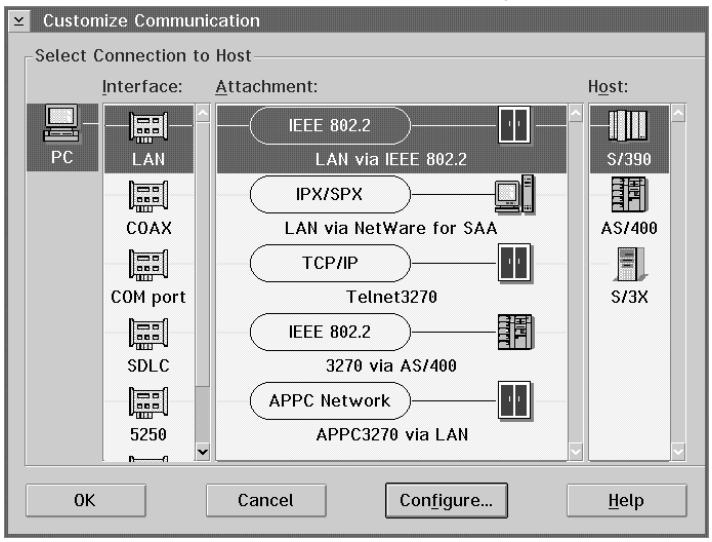

If three types of hosts are shown, click:

S/390 for connections to an S/390 system
AS/400 for connections to an AS/400 system
S/3X for connections to a System/36 or System/38

3 Click the adapter card (interface) that you will use; the attachment types that can be used with this adapter appear.

4 Click the attachment type to be used.

5 Select **Configure...**

The Customize Communication - xxxxx window appears. (*xxxxx* represents the attachment type for each session.)

For parameter details, refer to the online help from the Customize Communication window. Just double-click the **Help** button.

6 Select **Configure Link**.

Enter the required information, or select values for the session parameters. For details of these parameters, refer to the online help.

You can configure LUA or APPC connections if you selected the CM/2 attachment and you already have CM/2 or OS/2 Access Feature installed. To configure these connections, select **Configure LU Definitions** and follow the instructions that appear on your screen.

7 When you have finished, select **OK** on each window until you return to the session window.

8 If you have configured a connection that requires the installation of a device or IFS driver, a message appears that lets you choose to install the device or driver now or later.

a. If you select **Yes**, it is installed immediately. If you select **No**, you will need to install it later with the Configuration and Program Options utility in the Administration Tools folder.

Tip

Twinax, SDLC, coaxial, and Hayes AutoSync connections all require that a device driver be installed. Also, before you can use Shared Folders, an IFS driver must be installed. Therefore, if you want to make changes such as these, which require you to restart OS/2, make them now.

b. After the device or IFS driver is installed, shut down OS/2 and restart your workstation so the connection can be established.

9 If the following message appears:

"Communication will be terminated if you proceed. Are you sure?"

Select **Yes** to use the new configuration immediately. If you select **No**, the configuration information you just defined is lost.

Your configuration is now complete. If you want to save it, refer to "Saving Configuration Information" for details.

Saving Configuration Information

This section describes how to save configuration information to a workstation profile (***.WS**).

By default, Personal Communications saves your configuration when you exit a session, but you can also save your configuration manually. When you save your configuration, you can have a session icon added to the Personal Communications folder that you can double-click to restart a session.

Configuring Sessions

To save configuration information in a workstation profile:

1 Select **Save** or **Save As** from the File menu.

When you save an existing workstation profile with **Save**, the profile is saved using the existing name. You need not do the following steps.

Otherwise, the Save Workstation Profile As window appears.

2 Enter a file name that you want this profile to be saved as.

The name you enter is used as the icon title, unless you enter a description as well.

Note

When the file name is used for the icon title, it appears in lowercase and is restricted to 8 characters.

3 A message appears that lets you choose to have an icon created. If you select **Yes**, a session icon is created in the Personal Communications folder and you can start the workstation profile by double-clicking this icon.

If you select **No**, you can start the session window program (**PCSWS.EXE**) with the workstation profile name (***.WS**) on the OS/2 command prompt, as follows:

C:\PCOMOS2\PCSWS C:\PCOMOS2\PRIVATE*xxx*.WS

where *xxx*.WS is the workstation profile name.

Note that you must specify all paths and directories.

The configuration information is saved, and the message that tells you how to start a session appears. Select **OK**.

To configure another session, select **Run the Same** from the File menu and, if you want, change the configuration for that session.

Tip

If you want to start another session that is exactly like the one that is already started, select **Run the Same** from the File menu of the original session.

If you want to start a session that is exactly like one you have saved but that is not started, select **Run Other...** from the File menu of any session that is started. Select a profile from the list that appears.

Changing Configuration Information

To change a profile:

1. Double-click the icon corresponding to the profile to be changed.

   The session window appears.

2. Select **Configure** from the Communication menu.

3. The subsequent steps are the same as for setting up a new configuration. Refer to “Creating a Configuration” on page 19 and change the configuration information as required.

4. After you make all the necessary changes, select **OK** in the Customize Communication window.

5. If the following message appears:

   > Because you have changed the configuration, communication will be terminated if you proceed. Are you sure?

   Go to step 7 to continue.

6. If the following message appears:

   > Do you want to save the current settings?

   Go to step 8 to continue.

7. If you select **OK**, communication ends, but then you are reconnected using the new configuration. Go to step 9 to continue. If you select **Cancel**, your configuration changes are lost.

8. If you select **Yes**, Personal Communications updates the OS/2 system setup and you should restart OS/2 when you finish changing your configuration information.

   If you select **No**, you must manually change the system settings with the Configure and Program Options utility in the Administration Tools folder.

   The changes are saved in the workstation profile. Continue with step 9.

9. Select **Save** or **Save As** from the File menu to manually save your configuration.

   When you select **Save As**, the Save Workstation Profile As window appears. Specify each item and then select **OK**.

Configuring Sessions

Note

If you select **Save on Exit**, from the File menu, the changes are automatically saved to the existing workstation profile each time you exit this session.

Chapter 5. Using Sessions

This chapter describes how to start and stop single and multiple sessions.

If your configuration information was saved, as described in “Saving Configuration Information” on page 21, it is stored in a workstation profile (***.WS**). If you have a session icon, you can double-click it to start a session, using the saved configuration information.

Note

If you are a first-time user of Personal Communications, or there are no session icons in your Personal Communications folder, refer to Chapter 4 , to create a configuration.

Starting Sessions

You can use the following methods to start sessions:

- Select an already-configured session icon.
- Start from an existing session window.
- Specify a workstation profile name on the OS/2 command prompt. For example:

  C:\PCOMOS2\PCSWS.EXE C:\PCOMOS2\PRIVATE*MY*.WS

  of the Program Manager.
- Start multiple sessions with a batch file.

When you start multiple sessions, the titles of session windows are Session A, Session B, and so on, unless you’ve customized them.

© Copyright IBM Corp. 1989, 1996

Starting by Selecting the Session Icon

To start a session, double-click the **Session** icon. (This icon has the same name as the workstation profile if you did not specify a name for it.)

The session starts.

Starting from a Session Window

Use the following methods to start from an existing session window:

Start another session using the same workstation profile
Start another session using another workstation profile
Start a different type of session using the same session window

Starting Another Session Using the Same Profile:

Select **Run the Same** from the File menu. Another session starts, using the same profile.

Starting Another Session Using a Different Profile

1. Select **Run Other** from the File menu.

   The Open Other Workstation Profile window appears.

2. Double-click the desired workstation profile in the **File Name** list.

3. Select **OK**.

   Another session starts, using the profile specified in step 2.

Starting a Different Type of Session from a Session Window

1. Select **Open** from the File menu.

2. Specify the desired workstation profile and then select **OK**.

   The current session ends and then another session starts, using the selected profile.

Starting a Workstation Profile from the OS/2 Command Prompt

To start the session, type the following command on the OS/2 command prompt and then press Enter.

C:\PCOMOS2\PCSWS.EXE C:\PCOMOS2\PRIVATE*MY.WS*

where *MY*.WS is the workstation profile stored in the C:\PCOMOS2\PRIVATE directory.

The session starts, using the specified workstation profile.

Starting Multiple Sessions

You can use the batch program, which runs batch files (*.BCH), to start two or more workstation profiles at the same time. Personal Communications batch files can also start other programs when you include their startup commands. This is especially useful if you always want to start an application when you start a session. For example, you might want to start an application, such as ZipPrint, that uses a Personal Communications API.

If you created an icon for your batch file, you can start workstation profiles and other programs in the batch file just by double-clicking the icon.

Creating a Batch File

To create a batch file:

1 Double-click the **Multiple Sessions** icon.

The Create/Modify Batch File window appears.

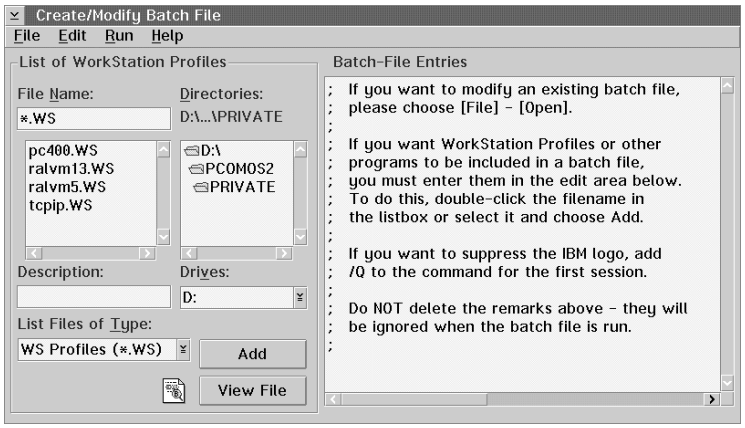

2 There are four methods for including profiles or programs in a batch file. Use the method you prefer:

Double-click the file names in the **File Name** list box.

Drag and drop the file names with the right mouse button from the **File Name** box to **Batch-File Entries**.

Select a file name from the **File Name** list box and then select **Add**.

Type the complete path and command file name in the edit area.

Personal Communications places the full path and command that is needed to run the workstation profile or other program above the cursor line in the edit area. If there is no cursor, the command will be added to the last line.

To see the contents of the profile you added to the batch file, click it in the **File Name** list box and then click **View File** or the magnifying glass.

Note

Some brief instructions appear at the top of **Batch-File Entries**; you need not remove them because they do not affect the running of the batch file.

3 Repeat step 2 for each subsequent file to be added.

PCSWS.EXE Options

To suppress the IBM logo when you start one or more sessions, add the parameter **/Q** to the first command in the batch file:

C:\PCOMOS2\PCSWS.EXE C:\PCOMOS2\PRIVATE\TCPIP1.WS **/Q**

To start a session as an icon, not as a window, add the parameter **/I** to the command in the batch file:

C:\PCOMOS2\PCSWS.EXE C:\PCOMOS2\PRIVATE\TWINAX.WS **/I**

To start a session with a specific short session ID, insert the parameter **/S=***m* after PCSWS.EXE in the batch file:

C:\PCOMOS2\PCSWS.EXE **/S=***m* C:\PCOMOS2\PRIVATE*LAN1*.WS

where *m* is the short session ID.

Note: If you use the /S option to assign A as the short session ID, you should use this option for all of the sessions in the batch file. Otherwise, if another session starts first, it becomes the A Session and the session with the /S=a option will not start because of the conflicting short session IDs. Another way to prevent conflicts is to assign a character later in the alphabet for the short session ID.

4 When you complete the edit, save the created batch file by selecting **Save** from the File menu.

The Save Batch File As window appears.

5 Enter a name for the batch file (***.BCH**).

The name you enter is used as the icon title, unless you enter a description as well.

Note

When the file name is used for the icon title, it appears in uppercase and is restricted to 8 characters.

6 Select **OK** to continue.

7 Select **Yes** if you want to create an icon for the batch file. group

A message appears, telling you to save the batch file.

8 Select **OK**.

Using Sessions

The following batch files sequentially run four workstation profiles, saved in the C:\PCOMOS2\PRIVATE directory, and then run **MYAPP.EXE**.

Sample PC/3270 Batch File

```
C:\PCOMOS2\PCSWS.EXE /S=b C:\PCOMOS2\PRIVATE\COAX1.WS /Q
C:\PCOMOS2\PCSWS.EXE /S=a C:\PCOMOS2\PRIVATE\COAX2.WS /I
C:\PCOMOS2\PCSWS.EXE /S=d C:\PCOMOS2\PRIVATE\SLAN1.WS
C:\PCOMOS2\PCSWS.EXE /S=c C:\PCOMOS2\PRIVATE\SLAN2.WS
C:\APPL\MYAPP.EXE
```

Sample PC400 Batch File

```
C:\PCOMOS2\PCSWS.EXE /S=b C:\PCOMOS2\PRIVATE\AS4X1.WS /Q
C:\PCOMOS2\PCSWS.EXE /S=a C:\PCOMOS2\PRIVATE\AS4X1.WS /I
C:\PCOMOS2\PCSWS.EXE /S=d C:\PCOMOS2\PRIVATE\AS4Y1.WS
C:\PCOMOS2\PCSWS.EXE /S=c C:\PCOMOS2\PRIVATE\AS4Y1.WS
C:\APPL\MYAPP.EXE
```

Using a Batch File

You can use one of the following methods to run a batch file:

Double-click a batch file icon.

Run the batch file from an OS/2 command prompt:

```
[drive]:\[path]\PCSBAT.EXE  [drive]:\[path]\xxxx.BCH  /R
```

Note: To run a batch file, specify the /**R** option.

Double-click the **Multiple Sessions** icon.

1. Select **Open** from the File menu in the Create/Modify Batch File window.
2. Select the desired batch file and then select **OK**.

   The contents of the batch file appears in the edit area.
3. Select **Run** from the Run menu.

Editing an Existing Batch File

To edit an existing batch file:

1. Double-click the **Multiple Sessions** icon.

   The Create/Modify Batch File window appears.

2. Select **Open** from the File menu.

   The Open Batch File window appears.

3. Select the batch file you want to edit and then select **OK**.

   The contents of the batch file you selected appear in the edit area of the Create/Modify Batch File window.

4. Edit the batch file. Refer to step 2 on page 28 for more details.

   Refer to the online help for details about the menu bar Edit functions. Select **Index** from the Help menu and then select **Menu-Bar Commands of the Batch-Program Window**.

5. When you complete the edit, save your changes by selecting **Save** or **Save As** from the File menu.

   Select **Save** to save your changes in the existing file.
   Select **Save As** to save your changes in a new file and then continue with step 5 on page 29.

6. Exit the Create/Modify window.

Starting Multiple Sessions without a Batch File

To start multiple sessions without a batch file:

1. Double-click the icon for the session you want to start first.

2. After it connects to the host, select one of the following choices from the File menu:

   Run the Same... to start another session with the same configuration.

   Run Other... to start a session with a different configuration.

   When the Open Other Workstation window appears, select the profile you want to start and then select **OK**.

Automatically Starting Sessions

To start one or more sessions automatically when OS/2 starts:

1. Open the OS/2 Startup folder.
2. Drag the **Session** icon or the **Batch** icon to the Startup folder.

Stopping Sessions

To stop a session, double-click the top-left corner of the session window, or select **Exit** from the File menu.

To stop multiple sessions at the same time, select **Exit All** from the File menu. All sessions end, and the associated session windows are closed.

Before Stopping a Session

If you perform this operation while a host application program is running, your session stops and you lose your connection to the program. Therefore, make sure you exit any host application programs–the system sign-on panel should appear in the session window–before you exit the session.

By default, your configuration information is saved when you exit the session.

Chapter 6. Managing Sessions

Personal Communications provides the following functions, in addition to those provided by OS/2, for those who work with several open session windows simultaneously. These functions allow you to manage your session windows easily and quickly.

Jump

Use **Jump** to switch between the currently opened session windows.

You cannot use Jump to switch to a session window that is currently hidden. Instead, select **Show** from the Window menu to display the session window on the screen. Then, select **Jump**.

Hide

Use **Hide** to stop displaying a visible session window.

You cannot hide all sessions. At least one session is always shown.

Note: Windows hidden with **Hide** are not displayed in the OS/2 task list.

Show

Use **Show** to display a session window that was previously hidden with **Hide**.

View

Use **View** to display a previously-saved arrangement of windows, or to save an arrangement of windows.

Personal Communications can save and restore the following information relating to the session window view:

Position and size of each window
Window status (standard, minimized, or maximized)
Window font

You can save view information for up to eight windows.

Getting Help

For more information about managing session windows, refer to the online help:

1. Select **Procedures** from the Help menu.
2. When the help window appears, search for managing or scroll down to **Managing Workstation Windows**.

   Select choices from that list for detailed information.

© Copyright IBM Corp. 1989, 1996

Chapter 7. Printing

You can use Personal Communications to print from display or printer sessions.

From display sessions, you can print all (**Print Screen**) or part (**Trim Print**) of the screen of your session window on a workstation printer.

To print only part of the session window, drag the mouse to create a trimming rectangle around the part of the window you want to print and then select **Print Screen** from the File menu.

From printer sessions, you can direct printing from an S/390, AS/400, or S/3X system to a workstation printer.

Configure a printer session to designate a workstation printer as a system printer that will use either the printer definition tables (PDTs) provided with Personal Communications or the OS/2 printer drivers.

Use PDT files for Personal Communications to print files based on printer control information, such as control codes and the printer output format, defined in the PDT.

Use OS/2 printer drivers for Personal Communications to print files based on printer setup parameters, such as scaling, duplex options, and page orientation, that you define in **Printer Setup**.

When you configure a printer session, refer to the online help for detailed information for each parameter.

For more information about printing, refer to *Personal Communications Reference* or the online *Information Notebook*.

© Copyright IBM Corp. 1989, 1996

Chapter 8. Editing

You can edit the contents of your session window using the OS/2 clipboard and the Edit menu. You can also link the session window with an OS/2 or a Windows application program by running **CopyLink** and **PasteLink**.

Note: The command you should use for PasteLink depends on the application program you are using.

Editing by Linking to OS/2 or Windows Application Programs

Linking to OS/2 or Windows application programs supporting **PasteLink** lets you paste session-window data to the windows of those application programs. You can run **CopyLink** when DDE/EHLLAPI is usable.

Confirming the DDE/EHLLAPI Settings

To check whether DDE/HLLAPI is currently set to usable status:

1. Select **API Settings** from the File menu.

   The API Settings window appears.

2. Make sure the **DDE/EHLLAPI** check box is selected.

   If the box is checked, DDE/EHLLAPI is set to usable status. Continue to step 4.

3. If the box is not checked:
   a. Click the **DDE/EHLLAPI** check box and then click **OK**.
   b. Stop and then start your session to enable the new settings.

4. If DDE/EHLLAPI was already set to usable status, select **OK**.

© Copyright IBM Corp. 1989, 1996

Using CopyLink and PasteLink

To use **CopyLink** and **PasteLink**:

1. Mark the session window area for which **CopyLink** should be issued.
2. Select **CopyLink** from the Edit menu.

   If the session window is already linked with an OS/2 or Windows application program, **CopyLink** appears in gray and cannot be selected. In this case, force the application program to end the linkage, or stop the application program. Then you can select **CopyLink**.
3. Start the OS/2 or Windows application program for the window to which an area should be copied.
4. Specify the location for which **PasteLink** should be run.
5. Issue **PasteLink** by using the menu for the application program.

   The contents of the marked area are pasted into the specified location in the window of the application program.

   CopyLink is now completed.

When the contents of the marked area in the session window are updated during linking, the contents of the area pasted to the window of the linked application program are also updated.

Copying Table Data to a Spreadsheet

You can use the **Cut**, **Copy**, **CopyLink**, or **CopyAppend** choices in the Edit menu to copy data in the session window to the window of an OS/2 or Windows spreadsheet application program.

To use **Copy**, select the **Paste** or **PasteLink** choice in the application program window into which data is to be copied.

Data in the marked area can be copied in the following three data formats, depending on the format supported by the spreadsheet for the window to which data is to be copied:

Sylk format Data format for general-purpose spreadsheets, such as Multiplan**

Biff3 format Data format for Microsoft** Excel**

Wk3 format Data format for Lotus** 1-2-3**

Note

Whether application programs, such as Excel or Lotus 1-2-3, also support these data formats in subsequent versions depends on individual application program specifications.

Individual items of data in tables of the session window are divided automatically such that they are suitable for spreadsheets, and they are copied into individual cells of tables in the application program.

Copying Marked Data without Dividing It into Cells

To paste data in the marked area per line, without dividing it into individual cells, add the following lines to the workstation profile:

```
[Edit]
Sylk=N          (If Sylk format data is not divided into cells)
Biff3=N         (If Biff3 format data is not divided into cells)
Wk3=N           (If Wk3 format data is not divided into cells)
```

Copying Lines Containing Only Operational Signs

If data in the marked area contains signs, such as +, –, =, or |, the signs are regarded as being ruled lines of the table. Once they are removed, only numeric data is copied.

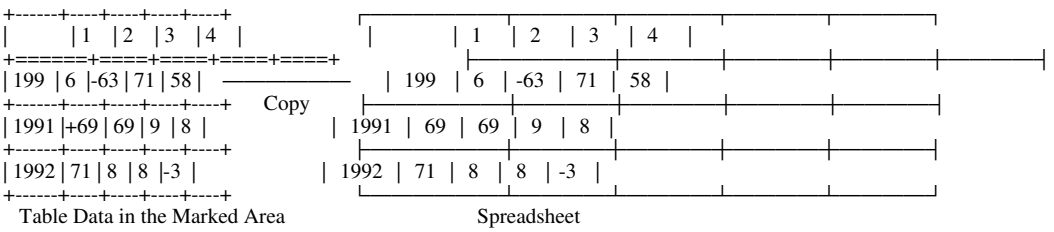

To copy these signs without replacing them with null characters, add the following lines to the workstation profile:

```
[Edit]
MaskGridCharacter=N
```

Copying Data in Cells As Text Data

Data in the marked area is treated as numeric data by default. Therefore, currency signs, such as $, and punctuation marks, such as commas, are removed before copying. To copy data containing such signs and marks as text data rather than numeric data, add the following lines to the workstation profile:

```
[Edit]
ConvertToNumeric=N
```

Data in the marked area containing signs and marks is then copied as text data. In addition, all numeric data that does not contain signs and marks is also copied as text data.

Getting Help

For information about all the tasks you can perform with the Edit menu choices, as well as how to mark and then edit an area within the window, refer to the online help:

1. Select **Index** from the Help menu.
2. When the help window displays, select **Menu Bar Commands of the Workstation Window**.
3. Select **Edit** from the list of Menu Bar Commands.

Chapter 9. Transferring Files

Personal Communications File Transfer enables the transfer of one or more files between a host system and workstation. You can define file transfer options in advance to help you transfer a variety of files quickly and easily.

File Transfer is quite different from the PC400 function, Data Transfer, which is described on page 53 . The main differences are listed here:

Type of Transfer	Products required on an AS/400 system	Access Method	Sending and receiving unit	Type of connection to an AS/400 system
File Transfer	Personal Communications Tools (APVAFILE)	Transfer menu in session window	Entire file	Display session
Data Transfer	PC Support/400 V2R2 or V2R3 or OS/400 V3R1 or later[1]	Data Transfer icon	Field, record, or file in a database	Router session
OS/400 provides the host transaction program for Data Transfer.				

With Personal Communications, you can perform the following file transfer functions:

Send files to the host system
Send files using the Transfer menu or, from 3270 sessions, the SEND command from an OS/2 command prompt.

Receive files from the host system
Receive files using the Transfer menu or, from 3270 sessions, the RECEIVE command from an OS/2 command prompt.

Create, test, replace, and delete templates
Create a template to have Personal Communications automatically generate a workstation or host file name and transfer type when you select a file to be sent or received.

Define transfer types
Define up to 16 transfer types for each host system. Text, binary, and append (except for CICS) are initially set as transfer types.

Select, create, and customize translation tables
Select translation tables to set which code pages are used during file transfer.

Import or export files (PC/3270 only)
Import/Export is an office system communication program and an application program run on the IBM Customer Information Control System (CICS). The import/export function makes it possible to import or export Final Form Text (FFT), Revisable Form Text (RFT), and PC documents.

© Copyright IBM Corp. 1989, 1996

Transferring Files

When you export a file, your workstation receives the file you exported and an interchange document profile (IDP) file. Before you can import a file to your workstation, you need to create an IDP file with transmission information.

Create interactive document profile (IDP) files (PC/3270 only)

An IDP file contains document header information, has the same name as the file to be transferred, and has the extension .IDP.

To create an IDP file, select **Setup** from the Transfer menu.

Host Requirements

Before you can send or receive files one of the following file transfer programs must be installed on the host system.

IBM 3270-PC File Transfer Program, 5665-311 (MVS/TSO)
IBM 3270-PC File Transfer Program, 5664-281 (VM/SP)
IBM 3270-PC File Transfer Program, 5798-DQH (CICS/MVS)
Personal Communications Tools Program Package (APVAFILE)

- 1/4-inch tape 85G9969
- 1/2-inch tape 85G9973
- 8-mm tape 46H8353

Getting Help

For more information about transferring files, refer to the online help:

1. Select **Procedures** from the Help menu.
2. When the help window displays, search for transfer or scroll down to **Transferring Files**.
3. Select choices from that list for detailed information.

Chapter 10. Setting Up a Session Window's Appearance

You can use the following functions from the Appearance menu to define the appearance of your session window:

Display Setup
Customize a variety of characteristics, such as the cursor, pointer, rule line, and trimming styles, graphics, sound, and color palette, in the display session.

Color Mapping
Set the colors used in session windows.

Font
Choose the font to use for display session windows, the style, and whether it will be an automatic sizing font or a fixed size font. If you use a fixed size font, you can also choose its size. The set of fonts from which you can choose depends on the type of display you are using.

Note: You cannot change the font size when the session window is maximized.

Window Setup
Change the appearance and title of the session window and change the session icon.

Tool Bar
Add, delete, move, copy, and rearrange buttons on the tool bar. You can also add or delete titles and borders for each tool bar item.

The settings are stored in a workstation profile.

Tool Bar Setup

The tool bar displays under the menu bar in your session window to allow quick access to the Personal Communications functions, commands, and defined macros.

© Copyright IBM Corp. 1989, 1996

Window Appearance

If you used USER1.MAC, USER2.MAC, or USER3.MAC in Version 4.0, Personal Communications automatically adds icons for them on the tool bar. Otherwise, the default tool bar does not contain icons for macros.

Use the tool bar pop-up menu to quickly and easily create, edit, and delete tool bar items, as well as to save and load customized tool bars. When you customize the tool bar, you can change the order of items, add and delete items, change the function, title, or graphic associated with any item, change the fonts, colors, and other tool bar visual style elements.

To customize your tool bar, select **Tool Bar** from the Appearance menu, or display the Tool Bar pop-up menu by clicking on the right mouse button while pointing at any part of the tool bar.

For information about customizing the tool bar, refer to the online help from the Tool Bar Setup window.

If you want to hide the tool bar, refer to “Showing or Hiding the Menu Bar and Tool Bar” on page 45.

Internet WebExplorer Icon

Personal Communications now lets you directly view an Internet World Wide Web page from your display session by using the IBM OS/2 WebExplorer. To do this, add the web tool bar function to your tool bar by selecting the web icon from the Assist page in the Tool Bar Setup notebook.

When you select the web icon from the tool bar, your display session screen is copied to the clipboard and examined for a valid uniform resource locator (URL) name. Then the IBM OS/2 WebExplorer application starts, using the URL from your display session screen to display the Web page.

You can restrict the search for a URL on your display session screen by first dragging with the mouse to create a clipping frame. If a clipping frame exists when you select the Web icon from the tool bar, Personal Communications searches only the contents of the frame for a valid URL name.

If no valid URL is found on the display session screen, the IBM WebExplorer is started with its default (home URL) web page.

Showing or Hiding the Menu Bar and Tool Bar

You can show or hide the menu bar or tool bar. To do this:

1. Click the top-left corner of the session window to display the system menu.

   Hide Menu Bar appears when the menu bar is shown

   Show Menu Bar appears when the menu bar is not shown

   Hide Tool Bar appears when the tool bar is shown

   Show Tool Bar appears when the tool bar is not shown

2. To hide either the menu bar or tool bar, select **Hide Menu Bar** or **Hide Tool Bar**.

3. To show either the menu bar or tool bar, select **Show Menu Bar** or **Show Tool Bar**.

   If you hide the menu bar, the Popup Menu Bar choice is added to the system menu. The Popup Menu Bar shows a cascading menu that contains all commands in the hidden menu bar.

Getting Help

If you're not sure how to set the session window's appearance options, view the detailed instructions in the help.

1. Select **Procedures** from the Help menu.

2. When the help window appears, search for appearance or scroll down to **Changing the Screen Appearance**.

   Select choices from that list for detailed information.

Chapter 11. Setting Up and Using the Assist Functions

Personal Communications provides auxiliary functions that help you perform tasks in your display sessions more efficiently. Select these functions from the Assist menu of the session window.

Keyboard and macro functions
Hotspots setup
Keyboard setup
Pop-Up keypad setup
Mouse setup
Macro functions

Keyboard/Macro Functions

A **Keyboard/Macro Function** lets you play macros or use Personal Communications–supplied key functions without using the keyboard. Run the macros or key functions from the current cursor position in the session window.

Key Functions

Personal Communications provides many key functions that can be assigned to the keys on the keyboard, the mouse buttons, or the buttons of the pop-up keypad. You can also use them in macros.

Hotspots Setup

A *hotspot* is an area of the session window on which you can double-click the left mouse button to perform a command or function. You do not need to use the keyboard. For example, you can double-click a PF key number to perform the PF key function.

© Copyright IBM Corp. 1989, 1996

3D Hotspots

Select **Show hotspots** to get 3D hotspots; these only require a single click, and they stand out on your screen.

You can define the following actions in a hotspot:

Simulate function keys

Play a macro that has the same name as the character string you select on the session window

Enter the selected string at the cursor position

Simulate the Enter key at the cursor position

Using Hotspots

Note: You must have a mouse to use hotspots.

To use a hotspot:

1 Move the mouse pointer to the hotspot displayed in the session window.

2 Double-click the left button of the mouse, except for 3D hotspots, which only require a single click.

Personal Communications determines whether you have specified a hotspot function that matches what appears at the position of the mouse pointer. If so, it processes the hotspot. When two or more hotspots are specified for a single character string, the *first retrieved hotspot* is processed.

Hotspots are retrieved in the following order:

(1) PFnn, FPnn, Fnn, nn
(2) Point-and-select (run the macro)
(3) Point-and-select (enter the selected string)
(4) Point-and-select (enter at the cursor position)

Keyboard Setup

You can use Keyboard Setup to modify the functions defined for each key on the keyboard.

You can define what each shift state of a key does; it can:

Perform a key function
Play a macro
Enter characters

To change your keyboard setup:

1. Select **Keyboard Setup** from the Assist menu.

   The Keyboard Setup window appears.

2. Select **Customize**.

3. When the Customize Keyboard window appears, change the key functions as you desire, referring to the online help for detailed instructions.

4. Save the new keyboard layout in a keyboard file (.KMP).

Note

Assigning a function to the PrintScreen key
If you redefine the PrintScreen key, you must disable that key in OS/2 System Setup. Otherwise, the new function will not work.

Assigning the Enter/Ctrl and Reset/Ctrl keys
If you redefine the Enter/Ctrl or Reset/Ctrl keys to another key, neither of the original functions will work correctly.

Note: For a list of the default key assignments, refer to Appendix E .

Pop-Up Keypad Setup

The pop-up keypad is a small window in which some buttons are arranged. To display the pop-up keypad, press the right mouse button or select the Assist menu and then select **Display Pop-Up Keypad**.

Assist Functions

You must have a mouse to use the pop-up keypad.

You can allocate the following functions to the buttons:

A standard key function provided by Personal Communications
A macro that you have created
A character string

To perform these functions, you only need to click the pop-up keypad with the left mouse button.

To view the description of each short-name key function or each macro name, click the right mouse button.

Pop-Up Keypad File

You can change the functions, colors, and size of the pop-up keypad. You can assign macros, functions, and characters to the keypads. You can save keypad attributes, such as the number of pads, number of buttons, functions, and colors in a file (***.PMP**). You can define which pop-up keypad file is allocated to the pop-up keypad.

Using the Popup Keypad

To use a pop-up keypad:

1. With the mouse pointer anywhere in the session window, click the right mouse button. Or select **Display Popup Keypad** from the Assist menu.
2. Select **Pad 1, Pad 2, Pad 3** or **Pad 4**.
3. Click the required button in the pop-up keypad.

Mouse Setup

The **Mouse Setup** lets you allocate functions to the right and left buttons of the mouse; this enables you to perform the following actions without having to use the keyboard:

Performing a key function
Playing a macro
Entering a character string

Mouse File

You can save the functions defined for the mouse buttons in a mouse file (***.MMP**). You can create one or more mouse files and switch between them as required.

Macro Setup

A macro is a sequence of actions and host commands that you can perform with a single command. You can edit an existing macro or create a new macro by selecting **Macro Setup** from the Assist menu.

Using a Macro

You can use a macro in various ways. Table 2 lists examples of how you can set up and then use macros.

Table 2. Macro Use Examples and Settings

If you want to...	Do this...
Automatically play a macro when your workstation starts.	Set an automatic start macro.
Play a macro during attachment to a host application.	Start **Macro** play.
Play a macro with the keyboard or macro function.	Use the **Keyboard/Macro Function**.
Double-click a hotspot to play a macro.	Set up a **Hotspot**.
Select a button from the pop-up keypad to play a macro.	Set up the **Pop-Up Keypad**.
Press the mouse button to play a macro.	Customize a **Mouse** file.
Press a key on the keyboard to play a macro.	Customize a **Keyboard** file.

Creating a Macro

To create a macro:

1. Select **Macro Setup** from the Assist menu.
2. When the Macro Setup window appears, select **Customize**.

3 When the Customize Macro window appears, edit the macro. You can enter macro statements directly or select a macro from the list of key actions.

Refer to the online help for detailed information.

4 Save the macro file and then select **OK**.

Macro Statements

You can use the following macro statements when you create a macro:

Key function
Any of the key functions provided

Macro
Edit an existing macro or create a new macro; you can nest up to 16 macros.

Character
Any character or string that you type or select.

Character string
Any character strings that you type or select.

Wait condition
Cause the macro to stop for various reasons that you can specify, such as the time or appearance of something in the session window.

Tokens
Commands, such as GOTO and RUN to add logic.

SEND/RECEIVE
Initiate a file transfer to or from the host system.

Getting Help

For information on how to set up and use the Assist functions:

1 Select **Procedures** from the Help menu.

2 When the help window appears, search for assist or scroll down to **Using the Assist Functions**.

Select choices from that list for detailed information.

Chapter 12. Data Transfer (PC400 Only)

PC400 Data Transfer enables you to transfer data between an AS/400 system and your workstation. To use the Data Transfer function, double-click the **Data Transfer** icon.

Transferring data is quite different from transferring files, which is described in Chapter 9 .

Requirements

Before you can transfer data with PC400:

IBM PC Support/400 (5738-PC1) must be installed on your AS/400 system, unless IBM OS/400 Version 3 or later is installed.

You must have a router session, unless you have an APPC connection via CM/2 or OS/2 Access Feature.

There are two types of data transfer, depending on the direction of the transfer.

Data sending

Data is transferred from your workstation to the AS/400 system. You can transfer data to any of the following destinations:

Existing members in an existing AS/400 physical file
New members in an existing AS/400 physical file
New members in a new AS/400 physical file

Note: You cannot transfer data from a workstation file to an AS/400 logical file.

© Copyright IBM Corp. 1989, 1996

Data Transfer

Data receiving

Data is transferred from the AS/400 system to your workstation.

While receiving data from the host, you can specify the data to be received and where the data is to be output.

Receivable data includes:

An entire AS/400 file
Part of an AS/400 file
Data combined from several AS/400 files
Summary of record groups

Specify the following output destinations:

Display
Disk
Printer

Also, you can specify when to receive data (date and time) and the numeric value format.

For more information about data transfer, refer to the *Personal Communications Reference* or the online *Information Notebook*. *Personal Communications Reference*.

Chapter 13. Shared Folders (PC400 Only)

The AS/400 system uses a structure called a *folder* to store and organize text documents, mail, and other related objects. Personal Communications lets you share these folders and store both AS/400 documents and your workstation files in them.

The Shared Folder function lets you access a folder on the AS/400 system as if it were a drive on your workstation. You can assign up to 8 folders at a time. For example, a folder on the AS/400 system could be assigned to drive E on your workstation; you could then access drive E the same way as you access drive C on your hard drive.

You can use the Shared Folders function to:

Take advantage of the additional AS/400 storage

Use AS/400 security to limit access to workstation files

Share data with multiple users at the same time

Back up workstation files to an AS/400 folder

Use OS/2 commands or AS/400 functions to work with workstation files

Requirements

Before you can use the Shared Folders function:

One of the following programs must have been installed on the AS/400 system:

- Client Access/400 (or OS/400 V3 or later)
- PC Support/400 (5738-PC1)

You must have a router session, unless you have an APPC connection via CM/2 or OS/2 Access Feature.

Starting Shared Folders

To start using Shared Folders:

1 Double-click the **Shared Folders** icon in the Personal Communications folder.

Note: If the IFS driver is not installed, a message asks if you want to install it now. If you do, select **OK** and then shut down and restart your workstation.

The Configure Shared Folders window appears.

© Copyright IBM Corp. 1989, 1996

2 Select a **Drive** to be assigned to an AS/400 shared folder.

3 Select the **System Name** of the AS/400 containing the shared folder you want to use.

4 Select the **Folder Name** you want to use.

If you want to assign a drive to a lower-level folder, double-click on its upper-level folder from the **Folder Name** list. The lower-level folders in the selected folder appear in the **Folder Name** list.

5 Select **Assign**.

The specified contents are displayed in the **Current Status** box.

You can now work with the contents of a shared folder through the assigned drive.

If you want to keep the same settings for the shared folders each time you use them, you can save them by doing either of the following steps:

Select **Save Current Assignments on Exit** from the File menu.

The current settings are saved when you exit the Shared Folders function.

Select **Save** from the File menu.

The current settings are saved in the Shared Folder profile (**PCSFLR.INI**).

Releasing Drives

To release assigned drives:

1 Select the drive name you want to release from the **Current Status** box in the Configure Shared Folders window, “Release”

2 Select **Release**.

The specified drive disappears from the **Current Status** box.

Considerations and Restrictions

This section describes Shared Folders considerations and command restrictions.

LAN and Switched Line Attachments

When you use a LAN, SNA-over-Async, Hayes** AutoSync, or switched SDLC attachment, you need to modify the controller device description to avoid automatic disconnection of the switched line.

To modify the control device description:

1. Enter **CHGCTLAPPC** on the AS/400 command line.
2. Specify the controller description name for the corresponding router session.

   The Change Controller Description (APPC) panel appears.

```
                    Change Ctl Desc (APPC) (CHGCTLAPPC)

Type choices, press Enter.

Controller description . . . . . > AKI85      ____________ Name
Online at IPL    . . . . . . . .    NO       ______        SAME  YES,  NO
APPN-capable . . . . . . . . . .    YES      ______        SAME  YES,  NO
Switched line list . . . . . . .    TRNLINE  _______       Name,  SAME
                    + for more values
Character code . . . . . . . . .    EBCDIC   _______       SAME,  EBCDIC,  ASCII
Maximum flame size . . . . . . .    16393    ______        265-16393, 256, 265, 512...
Remote network identifier   . . .   APPN     ______        Name,  SAME,  NETATR...
Remote control point . . . . . .    AKI85    ______        Name,  SAME,  NONE,  ANY
SSCP identifier    . . . . . . .    SAME     ______                1-FFFFFFFFFFFF...
Initial connection . . . . . . .    DIAL     ______        SAME,  ANS,  DIAL
Dial initiation    . . . . . . .    LINKTYPE _________     SAME,  LINKTYPE,  IMMED...
Switched disconnect    . . . . . .  NO       ______        SAME,  YES,  DIAL
Disconnect timer:
   Minimum connect timer    . . . .  17      ______        -65535 seconds
   Disconnection delay timer   . .           ______        -65535 seconds
                                                                          More...
F3=Exit    F4=Prompt    F5=Reshow     F12= Cancel    F13=How  to  use  this  display
F24=More keys
```

3. Type **NO** in the **Switched disconnect** field and then press Enter.

The following panel appears.

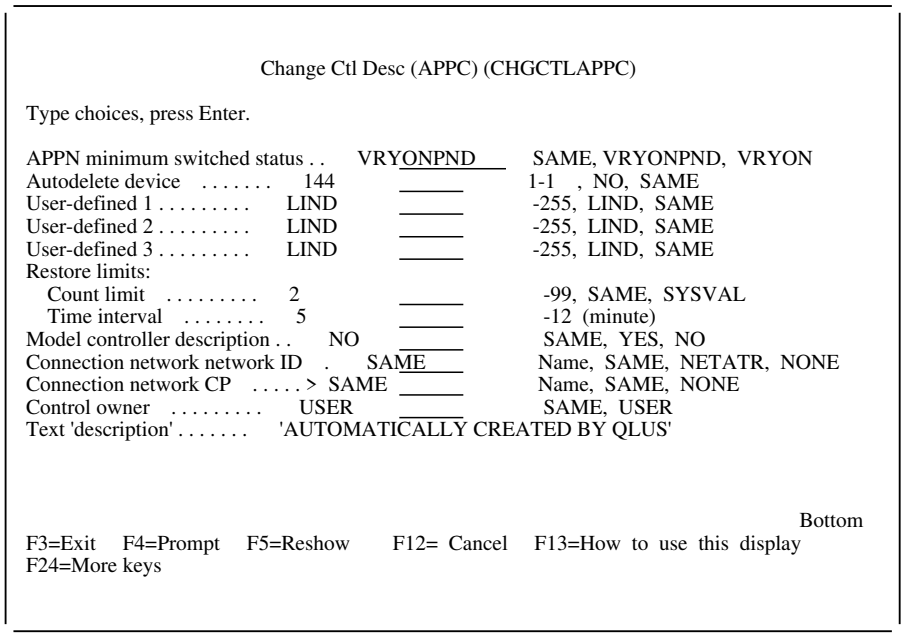

```
                        Change Ctl Desc (APPC) (CHGCTLAPPC)

Type choices, press Enter.

APPN minimum switched status . .    VRYONPND      SAME, VRYONPND, VRYON
Autodelete device  . . . . . .      144           1-1   , NO, SAME
User-defined 1 . . . . . .          LIND          -255, LIND, SAME
User-defined 2 . . . . . .          LIND          -255, LIND, SAME
User-defined 3 . . . . . .          LIND          -255, LIND, SAME
Restore limits:
  Count limit  . . . . . .          2             -99, SAME, SYSVAL
  Time interval  . . . . . .        5             -12 (minute)
Model controller description . .    NO            SAME, YES, NO
Connection network network ID  .    SAME          Name, SAME, NETATR, NONE
Connection network CP  . . . . > SAME             Name, SAME, NONE
Control owner  . . . . . .          USER          SAME, USER
Text 'description' . . . . . .      'AUTOMATICALLY CREATED BY QLUS'



                                                                      Bottom
F3=Exit   F4=Prompt   F5=Reshow     F12= Cancel   F13=How to use this display
F24=More keys
```

4. Type **USER** in the **Control owner** field and then press Enter.

Commands You Cannot Use

There are some commands that you cannot use when working with folders; for example:

CHKDSK	FDISK	RECOVER
DISKCOMP	FORMAT	SUBST
DISKCOPY	JOIN	

When you are using Shared Folders, you cannot use workstation applications that do direct sector input/output to your hard disk.

Commands with Restrictions

The following commands have restrictions when working with shared folders.

BACKUP
If two drives are assigned to the same folder, do not attempt to back up the folder from one drive to the other.

BREAK
BREAK must be enabled (BREAK=ON) for the **Ctrl+Break** sequence to work properly with a shared-folders operation.

COMP
When you use the COMP command to compare multiple files and the target file is in a folder, the shared folder is not closed until the COMP program completes.

COPY, **XCOPY**
Files cannot be copied to the root directory of a folder name.

EAUTIL
Two options are restricted.

You cannot use the /**J** option to join extended attributes to an object in a folder.

When you use the /**S** option to split extended attributes from an object in a folder, the size of the extended attributes in the object is not set to zero, because the AS/400 system retains the part of the extended attributes that includes the document-library object information.

To avoid these restrictions, copy the object to your hard drive and run the **EAUTIL** command from there.

Chapter 14. PC Organizer (PC400 Only)

You can use the PC Organizer to run OS/2 commands and applications, DOS commands and applications, or Windows applications from a 5250 display session.

AS/400 Requirements

Before you can use the PC Organizer, one of the following programs must have been installed on the AS/400 system:

Client Access/400 (or OS/400 V3 or later)
PC Support/400 (5738-PC1)

Starting the PC Organizer

To start the PC Organizer:

1. Start a 5250 display session.
2. Sign on to the AS/400 system.
3. Enter the following command on the AS/400 command line:

   STRPCO PCTA(NO)

Note

PC400 does not support the PC Text Assist (**PCTA**) function, so you should specify this parameter with ***NO**. Even if you specify ***YES**, you cannot use the PC Text Assist function provided by the PC Support/400 Workstation Feature.

You can now use the PC Organizer functions in a 5250 display session by using one of the following methods:

Display and then select choices from the menu.

To display the PC Support/400 or Client Access/400 Organizer menu, enter:

GO PCOMNU

© Copyright IBM Corp. 1989, 1996

PC Organizer

Enter PC Organizer commands.

To start the PC Organizer functions, enter:

STRPCCMD

PCO.EXE Message

When you run a workstation command, program, or DisplayWrite 5/2, you might receive a message that the **PCO.EXE** program is not active. You can ignore this message, because it is not necessary for PC400 to activate **PCO.EXE**.

Getting Help

Refer to the online help for more information about using the PC Organizer.

1. Select **Procedures** from the Help menu.
2. When the help window appears, search for organizer or scroll down to **PC Organizer (5250 Session)**.

   Select topics in the list to view information about starting and using the PC Organizer, using the PC Organizer menu, and the differences between the PC Organizer provided with PC400 and PC Support/400.

Chapter 15. Text Assist (PC400 Only)

With Personal Communications, you can use the improved text editing capability of Text Assist provided by the OfficeVision/400 word processing function to create a document or short messages, or to edit an existing document.

For more information about using Text Assist, refer to the documents for the OfficeVision/400 program.

The Text Assist function in Personal Communications is a “Controller Text Assist,” not the “PC Text Assist” supported by PC Support/400 Workstation Feature.

Controller Text Assist in Personal Communications provides the following functions that are not included in PC Text Assist:

Line commands
132 columns

Controller Text Assist in Personal Communications does not, however, provide the multicolumn edit function that is included in PC Text Assist.

After starting a 5250 display session, you can use the Controller Text Assist function without invoking the **Start PC Organizer** (**STRPCO**) command at the host.

Note: In the Text Assist environment, Alt key functions are assigned to the Ctrl key state to avoid conflicts with existing emulator functions. For example, the Word Underscore (WrdUnd) key is Ctrl+W rather than Alt+ W. Many of these functions can be remapped to the Alt key state without conflicting with emulator functions.

When you draw a line using the cursor draw option of the OfficeVision/400 program, the insert mode is not available.

AS/400 Software Requirements

The AS/400 system must have one of the following programs installed to support the Text Assist features:

OS/400 V2R2.0 with cumulative PTF C3285220 with PTF SF14687
OS/400 V2R3.0 with PTF SF14495
OS/400 V3R0.5
OS/400 V3R1.0, or later

© Copyright IBM Corp. 1989, 1996

Text Assist Key Functions

The following is a list of OfficeVision/400 Text Assist key functions:

Function	Description
Begin of Line	Moves the cursor to the beginning of the line
Begin Bold	Begins bold highlighting
Bottom of Page	Moves the cursor to the bottom of the page
Carrier Return	Ends a line of text or a paragraph by inserting a carrier return
Center Text	Centers a line of text
End of Line	Moves the cursor to the end of the line
End of Page	Inserts an “end of page” character at the cursor position
End Bold/Underscore	Ends bold highlighting and underlining
Half Index Down	Begin subscript or end superscript
Half Index Up	Begin superscript or end subscript
Insert Symbol	Displays a menu for special symbols
Display Text Codes	Shows hidden text controls
Next Column	Inserts a “next column” instruction at the cursor position.
Next Stop Code	Moves the cursor to the next stop code symbol
Required Backspace	Moves the cursor one space to the left
Required Space	Inserts a required space to keep words together on a line
Required Tab	Indents a block of text
Stop Code	Inserts a stop code at the cursor position
Top of Page	Moves the cursor to the top of the page
Begin Underscore	Begins underlining text
Word Underscore	Underlines the word that starts at the cursor position

Getting Help

Refer to the online help for more information about the Text Assist functions:

1. Select **Keyboard** from the Help menu.
2. Select **Search** and then type text assist in the Search for field.
3. Select the **All sections** radio button and then select **Search**.

   Select from the list of Text Assist key functions in the Search window for more information.

Chapter 16. Where to Find More Information

This chapter discusses getting help when you are installing, configuring, or using Personal Communications.

Online Help

This help facility describes how to install, configure, and use Personal Communications. Online help is very extensive and includes information about every aspect of configuring and using Personal Communications.

Use help to obtain the following information:

- Menu choices
- Operation procedures
- Operations in windows
- Meanings of the terms displayed in windows
- Causes of errors and the corresponding actions to take
- Mouse-based operations
- Operation without a mouse
- Detailed explanations of specific terms
- Further technical information about Personal Communications
- Detailed explanations of operator information area (OIA) messages

How to Use Online Help

To display online help, select choices from the Help menu.

You can use Personal Communications online help just as you use the online help for OS/2. Refer to IBM OS/2 information for details.

© Copyright IBM Corp. 1989, 1996

Messages

This section describes the Personal Communications OIA messages. Online messages are displayed during Personal Communications sessions but a message does not always mean an error occurred. For example, a message might tell you that an operation is in progress or has been completed. A message can also prompt you to wait for the completion of an operation.

Detailed descriptions of the Personal Communications messages are available in the *Personal Communications Reference* or the online *Information Notebook*.

OIA Messages

Personal Communications displays messages in the operator information area (OIA) or in a pop-up window. Messages from Personal Communications are displayed in the message window; messages from the host system are displayed in the OIA of the session window.

The bottom line of the session window is the OIA. The OIA indicator indicates the status of Personal Communications as well as information about the workstation, host system, and attachment method.

All of the OIA indicators, reminders, and messages are described in the online help. To view this information:

1. Select **Index** from the Help menu.
2. Select **The operator information area messages**.

To look up a specific OIA message, select **Search**. When the Search window appears, type the message number in the Search for field and then select **OK**.

Personal Communications Library

The Personal Communications for OS/2 library includes the following publications:

Personal Communications Up and Running, SC31-8258
Personal Communications Reference, SC31-8259
Personal Communications Programmer's Guide, SC31-8660
Personal Communications Tell Me About OS/2 Access Feature, SC31-8257

Use the *Information Notebook* to view topics described in the *Up and Running*, *Reference*, and *Programmer's Guide*, or view each book individually.

From the PCOMOS2\INFO directory at an OS/2 command prompt, enter:

VIEW PCSUANR to display the *Personal Communications Up and Running*.

VIEW PCSREF to display the *Personal Communications Reference*.

VIEW PCSPROG to display the *Personal Communications Programmer's Guide*.

Note: These books are optionally installed.

Related Publications

For information about local area networks (LANs), refer to the following publications:

IBM Local Area Network Technical Reference

AS/400 Communications: Local Area Network (LAN) Guide Version 2

Multi-Protocol Transport Services manuals

For information about TCP/IP, refer to the manual for *IBM TCP/IP Version 2.0 for OS/2 Base Kit*.

For more information about NetWare, refer to the publications for the following products:

For the client	*NetWare Client for OS/2*
For NetWare for SAA	*NetWare for SAA*

For more information about PC Support/400 refer to the following publications:

PC Support/400: OS/2 Installation and Administration Guide
PC Support/400: OS/2 User's Guide
PC Support/400: Application Program Interface Reference

Finding More Information

For more information about the mouse, refer to the *Mouse Driver User's Guide (OS/2)*.

For more information about OS/2, refer to:

The User's Guide to OS/2 Warp
Using OS/2, a tutorial
Online books in the Information folder on your desktop.

Contacting IBM

This section lists a number of ways you can reach IBM for various reasons. Depending on the nature of your problem or concern, we will ask you to be prepared to provide us with some information to allow us to serve you better.

If you have a technical problem, please take the time to review and carry out the actions suggested by the online *Information Notebook*. Use your local support personnel before contacting IBM. Only persons with in-depth knowledge of the problem should contact IBM; therefore, support personnel should act as the interface with IBM.

If you determine that you need to contact IBM, refer to "Statement of Service" for a detailed description of the services IBM provides.

Statement of Service

IBM provides defect support through Program Services. A defect related problem means the program does not conform to specifications and could be either a code or documentation error.

For information on how you may access Program Services, or other fee-based support services, please contact the Project Office at 800-799-7765. Hours of operation are from 8:00 a.m. - 5:00 p.m. Eastern Time, Monday through Friday, except U.S. national holidays.

The terms and conditions for the technical support described in this guide are subject to change.

Reporting Defects

Customers can report code-related problems to IBM electronically, via fax, or through U.S. mail. IBM will respond in the same media as the customer inquiry. IBM will respond to customer inquiries within a maximum of 2 business days of electronic or facsimile receipt, and 7 days of mail receipt advising of the problem disposition.

If the problem reported is not known to be a code-related problem, the customer will be informed that IBM will continue to work on it for a fee if the customer does not have a support contract, or is beyond the “getting started” period. If the problem is determined to be caused by an error in IBM code, the fee will be waived.

Submitting Defects by FAX: To Fax a potential defect to IBM:

1. Call 1-800-992-4777 to have a fax submission form sent to your fax machine. Follow the prompts to select the correct options. Fill out the form and fully describe your problem.
2. Fax the completed defect report to:

   8 -426-86 2

   Be sure to include your Fax number for a response.

Submitting Defects by Mail: To mail a potential defect to IBM:

1. Fully describe your problem
2. Mail the completed defect report to:

   IBM CORPORATION
   PERSONAL SYSTEMS SUPPORT FAMILY
   114 BURNET ROAD
   INTERNAL ZIP 29 1
   AUSTIN, TEXAS 78728

Be sure to include your return address for a response.

Submitting Defects Electronically: IBM will accept potential defect reports submitted using the Internet, TalkLink or Compuserve. Included here for convenience are the steps to access electronic customer support:

TalkLink via IBMLink: The Personal Communications AS/400 and 3270 products are supported via the OS2BBS1 section of the IBMLink service.

1. Access the OS2BBS1 section via an IBMLink Main Menu
2. Select "IBMSupt - IBM PS Defect Submission, CSD Order, & Info Library"
3. Select "PROBrpt - Submit an ETR (Defect Submission)"
4. Select "OTHERProb - PS Supportline - Other IBM Software Products Def. Menu"
5. Select "J-p - PS Supportline - IBM software products J to P Menu"
6. Then select the Personal Communications product in the displayed list (there are various versions and titles displayed, please choose the one that best describes your product)

A temporary reporting number will be displayed at the bottom of the screen. Record this number until a permanent Problem Management Record (PMR) number is assigned to your defect reported.

Also available in the U.S. is access to the PCOMM CFORUM on TalkLink. If you do not have access to TalkLink, call 1-800-547-1283 (U.S.A. only). TalkLink administration personnel will send you a registration package that lists the available features and the

current subscription rates. You should receive the registration package approximately two weeks after calling. Return the necessary documents and TalkLink administration personnel will send you a welcome package that contains the software you need to access TalkLink.

The Internet: In order to submit a software defect report for a Personal Systems Support Family product, go to URL:

http://ps.boulder.ibm.com/www/usa/ps/services

Please note that a customer number and a special personal identification number (PIN) is required to access this service. You can call 1-800-992-4777 to receive your customer number and PIN (tell the customer support representative that you need the customer number and PIN for reporting a defect via the Internet).

This will bring you to the IBM Personal Software Services page. Then choose "Electronic Services". From the Electronic Services page select "Other Electronic Services". On that page, review the section "E-mail Services for Problem Defect Reporting".

IBM Service Home Page:

http://ps.software.ibm.com

Some service fixes and other miscellaneous product information files are located at the following FTP location:

service.boulder.ibm.com/ps/products/pc3270
service.boulder.ibm.com/ps/products/pc400
service.boulder.ibm.com/ps/products/pctlkit
service.boulder.ibm.com/ps/products/nswin
service.boulder.ibm.com/ps/products/anynet

CompuServe: To report a suspected defect in a product in the Personal Systems Support Family via CompuServe:

1. From the CompuServe Main Menu, GO OS2SUPPORT
2. In the Library called "IBM Files" (library 23), download the file PROBLM.TXT.
3. Fill in the appropriate sections of the form contained in PROBLM.TXT (*note: some sections are specific to OS/2 and OS/2 related problems. Please complete the form as completely as possible for your specific operating environment.
4. Using CompuServe E-mail, send this completed form to the address: 76711,611

IBM will reply via CompuServe mail to each PROBLM.TXT defect report received. The reply will include a Problem Management Record (PMR) number. This number is used by IBM to track each unique problem reported by each customer. The IBM reply will also include any other information necessary for the situation.

Other Ways to Contact IBM

Information about Personal Communications is available from the following sources:

The PCOMM CFORUM

This forum is monitored by Personal Communications users and, when possible, by Personal Communications developers.

- In the U.S., access the PCOMM CFORUM on the OS2BBS bulletin board via TalkLink.

  If you do not have access to TalkLink/OS2BBS, call 1-800-547-1283 (U.S.A. only). TalkLink administration personnel will send you a registration package that lists the available features and the current subscription rates. You should receive the registration package approximately 2 weeks after calling. Return the necessary documents and TalkLink administration personnel will send you a welcome package that contains the software you need to access TalkLink/OS2BBS.

  IBMLink customers can register via SMARTLink's new TalkLink selection.

- In Canada, access the PCOMM CFORUM via IBMLink.
- In Australia, to access the PCOMM CFORUM:

  1. Type NEWMENU to access the pilot menus.
  2. Select **FORUMS**.

- In Europe, the Middle East, and Africa, use DIAL-IBM to access the PCOMM CFORUM via the CONFER application on OS2BBS.

  If you do not have access to OS2BBS, contact your country DIAL-IBM help desk.

Internet

IBM Personal Software Services has a home page on the Internet that has general product information as well as service information about APAR fixes. Using an Internet browser such as IBM Web Explorer, go to the following URL: http://ps.software.ibm.com/www/usa/ps/services/

IBM Networking Software has a home page on the Internet that also has general product information and service information. Using an Internet browser such as IBM Web Explorer, go to the following URL: http://www.raleigh.ibm.com/

IBM Personal Communications Online Customer Support

Access this electronic bulletin board to view information APARs and to obtain APAR fixes. To request that an APAR fix be made available, either leave a message for SYSOP on the bulletin board or call 1-800-992-4777 (U.S.A. only).

Finding More Information

To access the electronic bulletin board:

- Dial 919-543-8200 (country code: 001 from outside the U.S.A.).
- Use protocol N81.
- Follow the instructions. Entering your first name and last name registers you the first time you use the facility.

The IBM Software Solutions Center

From the U.S.A., call 800-992-4777. From Canada, call 800-465-2222. Outside call IBM International Information at 800-426-1774.

The OS/2 Developer's Assistance Program

Call 407-982-6408 (country code: 001 from outside the U.S.A.).

Appendix A. Communication Adapters and Modems

This appendix lists the communication adapters and modems that Personal Communications supports. It also describes how to install the software so you can use a PCMCIA adapter card in your workstation.

Note

Personal Communications will continue to provide support for modems in the marketplace by creating preconfigured modem initialization strings. If your favorite modem is not listed here, select a similar one from the list and try that configuration for your modem. If it doesn't work, call IBM Service to have your modem added to the list of modems supported.

Family-1 Communication Adapters

Personal Communications supports the following communication adapters for workstations with an AT-bus.

Advanced IBM PC 3278/79 Emulation Adapter (PC/3270 only)
IBM Enhanced 5250 Display Station Emulation Adapter (PC400 only)
IBM Multiprotocol Communications Adapter for ISA (SDLC)
IBM PC Asynchronous Communications Adapter
IBM PC AT Serial/Parallel Adapter
IBM PC Network Adapter
IBM PC Network Adapter II
IBM PC Network Adapter II -- Frequency 2
IBM PC Network Adapter II -- Frequency 3
IBM PC Network Baseband Adapter
IBM PC Network Broadband Adapter II
IBM PC 3278/79 Emulation Adapter (PC/3270 only)
IBM SDLC Communications Adapter
IBM Token-Ring Network PC Adapter
IBM Token-Ring Network PC Adapter II
IBM Token-Ring Network 16/4 Adapter
IBM Token-Ring Network 16/4 Trace and Performance Adapter

© Copyright IBM Corp. 1989, 1996

Adapters and Modems

IBM Token-Ring Network Trace and Performance Adapter II
IBM WaveRunner Digital Internal Modem (ISA)
IBM WindSurfer Communications Adapter (ISA)
IBM 5250 Adapter
Attachmate 3270 Adapter (PC/3270 only)
Attachmate ADVANCE 3270 Adapter (PC/3270 only)
DCA IRMA 3 Convertible 3270 Adapter (PC/3270 only)
Western Digital Ethernet** Plus
3COM Ethernet II

Family-2 Communication Adapters

Personal Communications supports the following communication adapters for workstations with a Micro Channel bus.

IBM Asynchronous/SDLC V.32 Modem/A (MPA card with modem)
IBM Multiprotocol Adapter IV/A
IBM PC Network Adapter II/A
IBM PC Network Adapter II/A -- Frequency 2
IBM PC Network Adapter II/A -- Frequency 3
IBM PC Network Baseband Adapter/A
IBM PC Network Broadband Adapter II/A
IBM PS/2 Ethernet Adapter/A
IBM PS/2 Multiprotocol Adapter/A
IBM PS/2 Dual Asynchronous Communication Adapter/A
IBM S/36/38 Workstation Emulation Adapter/A
IBM Token-Ring Network/A
IBM Token-Ring Network 16/4 Adapter/A
IBM Token-Ring Network 16/4 Trace and Performance Adapter/A
IBM Token-Ring Network Trace and Performance Adapter II/A
IBM Token-Ring Network PS/2 Model P70 386 Adapter II/A
IBM WaveRunner Digital Internal Modem (MCA)
IBM WindSurfer Communication Adapter (MCA)
IBM 3270 Connection (PC/3270 only)
IBM 5250 Emulation Adapter/A
IBM 5250 Adapter/A
Attachmate 3270 Adapter (PC/3270 only)
Attachmate Advance 3270 Adapter/2 (PC/3270 only)
DCA IRMA 3 Convertible 3270 Adapter (PC/3270 only)
Western Digital (SMC) Ethernet Plus/A
3COM Etherlink/MC**

Asynchronous Modems

Personal Communications supports asynchronous modems for Advantis (IIN), IBM Global Network Connection, SNA over Async, and Home3270 connections.

IBM 5841 (1200bps)
IBM 5842 (2400bps)
IBM 5853 (2400bps)
IBM 7855 V.32
IBM ASYNC/SDLC V.32 Modem/A
IBM Internal Data/FAX (2400bps)
IBM High Speed Internal Data/FAX
IBM PCMCIA Data/FAX (2400bps)
IBM PCMCIA 2400bps Data (Japan version)
IBM 14.4/14.4 PCMCIA Data/FAX
IBM Push-Pop Modem (Data/Fax 14.4K) (Japan Only)
IBM WaveRunner Digital Internal Modem
IBM WindSurfer 14400 Modem
APEX PCMCIA PCR - 9696
APEX PCMCIA PCR - 1414
ARN DX-MC2
AT&T Paradyne PCMCIA 14.4K Data/Fax for Cellular Mode
AT&T Paradyne PCMCIA 14.4K Data/Fax for Normal Mode
Com1 MC217
Communicate PCMCIA 14400 Fax & Data Modem
Data Race RediCard High Speed PCMCIA Data/Fax modem
Digicom Systems Eagle
Gold Card PCMCIA Modem
Hayes Smartmodem 1200 compatible
Hayes Smartmodem 2400 compatible
Hayes Smartmodem** Ultra 9600
Hayes Smartmodem Ultra 14400
Hayes Smartmodem Optima 9600
Hayes Smartmodem Optima 14400
Hayes Smartmodem Optima 144 for PCMCIA
Hayes Smartmodem Optima 28800
Intel SatisFAXtion 400e
Megahertz PCMCIA XJ1144
Microcom QX/423 bis
MultiTech MultiModem MT1432BLK
MultiTech MultiModem ZDX for Data & Fax
Nokia NMP V32bis Data/Fax PCMCIA Modem
Practical Peripheral PM14400FXSA
Universal Data Systems FasTalk FAX32
US Robotics Courier HST Dual Standards
US Robotics Sportster 14.4 External Modem

Adapters and Modems

US Robotics Courier 28800 External Modem
Zoom V.32 bis
Zyxel U1496E Plus

Asynchronous Modems (Hayes AutoSync)

Personal Communications supports the following Hayes AutoSync-compatible modems.

IBM 14.4/14.4 PCMCIA Data/FAX
APEX PCMCIA PCR - 9696
APEX PCMCIA PCR - 1414
ARN DX-MC2
AT&T Paradyne PCMCIA 14.4K Data/Fax
Com1 MC217
Hayes Ultra 9600
Hayes Ultra 14400
Hayes Optima 9600
Hayes Optima 14400
Hayes Optima 144 for PCMCIA

Synchronous Modems (SDLC)

IBM 7855
Hitachi Hybrid Phone
NEC ITM2400mkII

PCMCIA Communication Adapters

Personal Communications supports the following PCMCIA communication adapters.

IBM Credit Card Adapter for Ethernet
IBM PCMCIA Data/Fax Modem
IBM PCMCIA High Speed Data/Fax Modem
IBM Token-Ring 16/4 Credit Card Adapter
IBM 3270 Emulation Credit Card Adapter (PC/3270 only)
IBM 5250 PCMCIA Adapter Card
Xircom** Credit Card Ethernet Adapter

Installing PCMCIA Support

If your workstation uses PCMCIA cards, the software that enables these cards to work must be installed on your workstation. This software consists of two main layers, Socket Services and Card Services, and some device drivers that are associated with them.

The device drivers required depend on the version of OS/2 and the type of workstation that you have.

For OS/2 V2.1:

PCMCIA.SYS	Card Services [1]
IBM2SS*nn*.SYS	Socket Services [2]
$ICPMOS2.SYS	Power Management [2]
ICRMUnn.SYS	Resource Map Utility [2]

For OS/2 Warp V3:

PCMCIA.SYS	Card Services
IBM2SS*nn*.SYS	Socket Services [3]
	where *nn* represents: 01 for AT-bus computers 02 for Micro Channel computers
	Both are provided with and installed by OS/2.

[1] Provided with and installed by OS/2
[2] Provided with the workstation
[3] For IBM computers; similar drivers are provided for others.

Sequence and Position of the Drivers

The sequence in which the PCMCIA device drivers are loaded is critical; normally, this will be taken care of by the program that installs them but, if you have a problem, you should ensure that the sequence is correct.

OS/2 v2.1:

```
DEVICE=C:\OS2\PCMCIA.SYS
DEVICE=C:\OS2\COM.SYS
          :
DEVICE=C:\IBMCOM\MACS\IBMTOKCS.OS2 (LAN-adapter driver)
          :
DEVICE=C:\PCMCIA\IBM2SSnn.SYS /S =2
DEVICE=C:\PCMCIA\ICRMUnn.SYS
DEVICE=C:\PCMCIA\$ICPMOS2.SYS
```

OS/2 Warp V3:

```
BASEDEV=PCMCIA.SYS /P
          :
DEVICE=C:\OS2\BOOT\COM.SYS
          :
BASEDEV=IBM2SS 1.SYS /S =2
          :
DEVICE=C:\IBMCOM\MACS\IBMTOKCS.OS2
```

Personal Communications Device Drivers

Some attachment types need a device driver; when you configure any of these attachments, Personal Communications installs the appropriate driver. The driver must be loaded after the PCMCIA device drivers, so the configuration program adds them (in DEVICE= statements) at the end of CONFIG.SYS:

```
PCSCOAX.SYS (DFT)
PCSTDLC.SYS (Twinax)
PCSSDLC.SYS (SDLC)
PCSHAM.SYS (Hayes AutoSync)
```

Appendix B. Attachment Considerations

This appendix describes factors you should consider when configuring Personal Communications for the attachment types listed here.

COAX Attachment

This section describes factors you should consider when configuring Personal Communications with a coax attachment.

Avoiding Machine Check 207

Patch the microcode of the 3174 control unit. The following table shows the relationship between 3174 control unit microcode levels and patch IDs:

Microcode Level	Patch ID
S0503	PCA53D1
S0504	PCA53D2
A0503	PCA53D3
A0504	PCA53D4
B0200	PCA53D5
B0401	PCA53D6
B0402	PCA53D8
C0101	PCA53D7

In addition, if you have a 3174 with Configuration Support B or higher, you can set the following parameters:

3174 customization Q126 digit 2=1 to change the COAX timeout from 50 to 100 microseconds.

3174 customization Q125 digit 4=1 to set command chaining off.

Polling Feature

Certain ISA-bus workstations disable interrupt-level 2 (IRQ 9) and reserve it for their own use. IRQ 9, a redirected IRQ 2, is the only interrupt level that can be used by the IBM 3278/79 emulation adapter. Sometimes, when you try to use PC/3270 for coaxial-cable attachment with this type machine, you cannot connect to a host system.

© Copyright IBM Corp. 1989, 1996

If this happens, add the **Poll=Y** parameter to the [CSDFT], [CNDFT] or [CUT] section of your workstation profile (.WS) as follows:

SNA/DFT attachment

```
[CSDFT]
Poll=Y          <-- add
```

Non SNA/DFT attachment

```
[CNDFT]
Poll=Y          <-- add
```

CUT attachment

```
[CUT]
Poll=Y          <-- add
```

Running PC/3270 on a PS/VP with a Coaxial-Cable Attachment

The PS/VP system unit uses IRQ 9 for AT applications that use video retrace; IRQ 9 conflicts with the IBM 3278/79 emulation adapter. To use the 3278/79 emulation adapter, remove a jumper (the function of which is “Video Interrupt (IRQ9) enable”), from the system board. The jumper varies according to the model of PS/VP, here are some examples:

PS/VP 6381 /Si 425SX and 433SX : Jumper J23
PS/VP 6381 /Si 433DX and 466DX2 : Jumper J14

Ask your IBM dealer for information about other models.

Also, you can use the PC/3270 Coax Polling feature described on page 81 .

Functions Not Available with CUT Attachment

When the workstation is configured by CUT attachment, the following functions cannot be used:

File transfer
API (DDE,EHLLAPI,SRPI) function
Host graphic function
Edit functions, except for copy and copy append
Host print function

Controller Language for CUT Attachment

Only American English and Austrian/German are supported as the controller language. The controller language can be retrieved by controller customization question number 121.

PCMCIA Configuration for a DFT or CUT Attachment

Using PCMCIA: If your workstation has an IBM 3270 Emulation Credit Card Adapter (3270 CCA) installed, Personal Communications uses it in the same way as the IBM 3278/79 Emulation or 3270 Connection Adapter, but configuration of the card and of the 3270 sessions is more complicated. When you use 3270CCA with a token-ring credit card adapter, you must change the interrupt level of the token-ring card through the IBM LAN Adapter and Protocol Support (LAPS) configuration.

Confirm that Card Services (**PCMCIA.SYS**), Socket Services (**IBM2SSxx.SYS**), and Resource Map Utility (**ICRMUxx.SYS**) are specified in the **CONFIG.SYS** to be installed, before you use the IBM 3270 CCA adapter to connect.

LAN via IEEE 802.2 Attachment

The following is a description of preinstallation considerations for installing PC/3270 for use on a LAN or a gateway. For more detailed information, refer to the *IBM Local Area Network Technical Reference*.

Using a PCMCIA Token-Ring or Ethernet Card

PC/3270 supports the IBM Token-Ring and Ethernet credit card adapters in the same way as it does the full-size adapters. You must install the IBM LAN Adapter and Protocol Support (LAPS), which is included in IBM Multiple Protocol Transport Services, to provide the interface to the cards and then configure PC/3270 in the usual way.

Note: When you install LAPS, you need the PCMCIA optional diskette. For more information, refer to “Installing PCMCIA Support” on page 79.

Using an Ethernet Adapter

This section describes the considerations for using PC/3270 on an Ethernet local area network.

PIU Size: The maximum PIU size allowed for PC/3270 on Ethernet is 1490 bytes. If it is set higher, you get message MACH682 in the operator information area, and the attempt to connect to the gateway fails.

Supported Configurations: Only network station configuration is supported on a network that uses the NDIS interface.

Sharing the LAN Adapter with Other Applications

When you start PC/3270, the emulator opens the LAN adapter that will be used if it is not already open. When the program is stopped, however, the emulator does not close the adapter if another application is using the adapter. This requires that the workstation be restarted when the PC/3270 configuration is changed so that the adapter parameters are reset.

If another application is sharing the LAN adapter with PC/3270, open the adapter with parameters that provide resources for both. For example, the LAN Requester and PC/3270 can share the same LAN adapter.

Using More Than One Host Link

If you want to have concurrent sessions to more than one host system, you must increase the number of 802.2 link stations with which PC/3270 opens its SAP; the default is 1. To do this, increase the link-station count in the configuration for the session (workstation) that will start first. If you will not always start the same session first, you should increase this parameter in the configurations for all your sessions so that you will always have enough resources available.

To change the link-station count:

1. Click **Configure** on the Communication menu in the session window.
2. Select **Configure**.
3. When the Customize Configuration window appears, select **Configure Link**.
4. Select **Advanced** and then change the Link Station Count.
5. Confirm that the value of **Maximum link stations** is high enough in the Setup IBM IEEE 802.2 window of LAN Adapter and Protocol Support (LAPS).

If your LAN Support Program configuration includes DXMT0MOD.SYS, make sure that the EST parameter value is high enough (1 for each link).

LAN via NetWare for SAA Attachment

You can have 3270 sessions on the LAN IPX/SPX network through a NetWare for SAA, which run on the NetWare server. For this attachment, you need a token-ring, an Ethernet, or a workstation network adapter.

NetWare Client for OS/2

Before you use a PC/3270 LAN via NetWare for SAA connection, install NetWare Client for OS/2 and add SPX Support for OS/2 sessions as optional protocols.

If your workstation is on a token-ring network with source-routing bridge, **ROUTE.SYS** must be specified in your **CONFIG.SYS**. **ROUTE.SYS** is supplied with NetWare Client for OS/2.

For more information, refer to the NetWare Client manual for OS/2.

The default value for the number of SPX sessions is 16. If you want to use more than 16 host sessions, edit NET.CFG and increase the number of SPX sessions.

You should also note the number of IPX sockets. The NetWare Requester requires at least three sockets per server connection, and Personal Communications requires two sockets per host session. The default value for the number of IPX sockets is 64. If you want to use several server connections and host sessions at the same time, you might need to increase the number of IPX sockets.

Example of NET.CFG

```
PROTOCOL STACK SPX
   SESSIONS  32

PROTOCOL STACK IPX
   SOCKETS  128
```

For more information, refer to the manuals or the online help for the NetWare Client for OS/2.

Using an Asterisk for the Server Name and Service Name

You can enter an asterisk (*) instead of the server name or the service name. However, if you do this and there are several servers on the network, you might access more than one server.

If you have a password-protected user name, you must enter the correct password in the password-entry window.

If there are several NetWare servers on your network and more than one has a definition for the same user name that you specify, the first Password window might be for another server instead of the server that you want to use.

In this case, when you select **Cancel**, the Password window for the next server appears. Repeat this action until you can enter your password for the correct server.

Restrictions

The following functions are not available with this connectivity.

SDDLU (self-defining dependent LUs)
SNA session-level compression and decompression

TCP/IP Connection

This section provides information, considerations, and restrictions for Personal Communications TCP/IP connections.

Telnet3270 Attachment

Before Telnet3270 attachment is used, TCP/IP Version 2.0 for OS/2 Base Kit or later must be installed. For more information, refer to *IBM TCP/IP Version 2.0 for OS/2: Installation and Administration*.

At the Telnet3270 server in a host system to which you want to connect, IBM TCP/IP for VM or IBM TCP/IP for MVS must be running.

Restrictions

The following functions are not available with this connectivity.

- SDDLU (self-defining dependent LUs)
- SNA session-level compression and decompression

Host-Addressable Printing

Host-addressable printing is supported with the Telnet3270 attachment, using the TN3287 or TN3270E protocols. You need to attach through a Telnet3270 server, which supports these protocols.

Screen Size

The following four screen sizes are supported:

24 x 80
32 x 80
43 x 80

27 x 132

Telnet5250 Attachment

Before Telnet5250 attachment is used, TCP/IP Version 2.0 for OS/2 Base Kit or later must be installed. For more information, refer to the *IBM TCP/IP Version 2.0 for OS/2: Installation and Administration*.

Session Type

Telnet5250 supports the display session only.

SDLC Attachment

This section describes factors you should consider when configuring Personal Communications with an SDLC attachment.

Saving Memory

When you perform two SDLC attachments using two adapter cards, PCSSDLC.EXE sets the default so that two instances (DATA and STACK) can be provided for the SDLC protocol machine to avoid confusion between those adapter cards.

If you always use SDLC attachment with only one adapter card, add the following parameter to the [**SDLC5250**] section of the workstation profile (***.WS**). You can reduce base memory (up to 640 KB) usage by approximately 1,250 bytes.

```
[SDLC525 ]
NumOfInstances=1                    <- Added
```

Line Speed

For the SDLC attachment, a line speed of up to 19,200 bps is supported. However, the actual line speed will vary with the adapter version and machine performance. If an SDLC attachment fails at the specified line speed, reduce it.

Performance Considerations

With SDLC attachment, if you use multiple sessions in a high-speed and high-load configuration, or if you run the session at the same time with other multiple applications, the connection to the host might fail. In this case, specify host or Personal Communications timeout values such that the host's timeout value is greater than that of Personal Communications.

To change the host timeout value, modify the following NCP parameters:

REPLYTO
The maximum duration in seconds that the host waits for a reply from the terminal. The default is 1 second.

RETRIES=(m,t,n)
The number of attempts to be made to recover from errors occurring during transmission over the link. Repetitive retries are called a retry sequence. The maximum number of retries is specified as m, which can be from 0 to 128. NCP pause (the time between the retry sequences) is specified as t and can be from 1 to 255 seconds. The maximum number of retry sequences is specified by n and can be from 1 to 127.
For example:

```
REPLYTO=1, RETRIES=(3,4,5)
(( 1(seconds) x 3(times) + 4(seconds)) x 5(times)
= 35 (seconds)
```

Note: In this example, the host will wait 35 seconds for the terminal to reply.

For more details, ask your system personnel.

Change the Timeout value in the [SDLC] section of your workstation profile (.WS) as follows:

```
[SDLC]
  :
TimeOut=15     <<-- change
```

The value is in seconds and can be from 1 to 3 . The default is 3 .

Connection to a 7855 Modem

When you use the IBM 7855 modem, you can select the 1984 type or the 1988 type. If you select the 1988 type, the modem returns *CNX* when you dial correctly. Insert that string in **Dial Response** of the Modem Control Information window.

Notes:

1. You can select 1984 type or 1988 type as the V.25 bis option.
2. You can find the Modem Control Information window as follows:
   a. Select **Configure Link** in the Customize Communication window for SDLC.
   b. Select **Customize...**.
   c. Select **Modem Information** and then the Modem Information window appears.

.

Otherwise, that response is regarded as the host response; then the session can be shut down.

Interrupt Conflict between SDLC Adapter and COM2

The IBM Multi-Protocol Adapter and the AT-bus SDLC Adapter use interrupt-level 3 (IRQ3) and cannot be changed. COM2 also uses interrupt-level 3 (IRQ3) by default. In this case, you cannot use a Personal Communications SDLC connection with any other applications that use Windows COM2 at the same time. If you do, an IRQ3 conflict results. Also, you cannot use an SDLC attachment with any other applications that use IRQ3 or IRQ4.

Advantis (IIN) Attachment

Advantis (IIN) supports only a single adapter, and you cannot use other connections at the same time.

Sharing the Interrupt Level

At ASYNC attachment, interrupt levels 3 (IRQ3) and 4 (IRQ4) are used for hardware control. If this unit shares those interrupt levels with another unit, communication might fail.

Attachment Considerations

Line Speed

Line speeds up to 38,400 bps are supported. The maximum usable line speed depends on the speed of the processor or communication port, however. When the ASYNC attachment is established at the specified line speed, if communication stops or becomes exceedingly slow, reduce the line speed.

Modem Configuration

The Series/1 gateway has the following restrictions:

Error correction is not supported.

V.25, V.32bis, V.42, and V.42bis functions will NOT work. These are sometimes your modem's defaults; if so, you must turn them off.

Hardware and software flow control must be disabled.

V.32 is required for 9600 bps transmission.

Hayes AutoSync Attachment

Performance Considerations
Because the Hayes AutoSync attachment requires high speed between the serial port and the modem, you need a 486-class workstation with a 33 MHz CPU or better.

If your connection fails (for example, the communication is very slow or stops), try a lower line speed. You set the line speed in the Automatic Dial Facility window.

If the line disconnects or an error occurs during connection, reduce the line speed or the PIU size. This might happen because the performance of your workstation is too slow or the line is poor.

IBM Global Network Connection Attachment

IBM Global Network Connection supports only a single communication port.

Sharing the Interrupt Level

At IBM Global Network Connection, interrupt levels 3 (IRQ3) and 4 (IRQ4) are used for hardware control. If this unit shares those interrupt levels with another unit, communication might fail.

Line Speed

At IBM Global Network Connection, up to 38,400 bps is supported as the line speed. However, the maximum usable line speed depends on the speed of the processor or communication port. When the IBM Global Network Connection is established at the specified line speed, if communication stops or becomes exceedingly slow, reduce the line speed.

Functions not available for IBM Global Network Connection

When the workstation is configured by IBM Global Network Connection, you cannot use the following functions:

Import/Export function
SRPI function
Host graphic function
Host print function

Home3270 Attachment

Home3270 supports only a single adapter, and you cannot use other connections at the same time.

Line Speed

Line speeds up to 57,600 bps are supported. However, characters might be lost on high-speed lines, depending on the processor speed. When the Home3270 attachment is established at the specified line speed, if communication stops or becomes exceedingly slow, reduce the line speed.

Unsupported Character Sequences

The following character sequence is valid for the Home3270 attachment. However, it performs no function.

ESC P 1 (Block cursor command)
ESC P 0 (Underline cursor command)
DLE DC2 (Printer start command)
DLE DC4 (Printer end command)

Conditions for Communication Check 50x

Home3270 requires both Data Set Ready (DSR) and Carrier Detect (CD) to determine the state of the attachment with the host system. If DSR is not recognized, communication check 501 appears in the operator information area. When DSR is recognized, if CD is not recognized, communication check 504 appears in the operator information area.

When you select ROLMphone** with DCM in the Home3270 configuration, communication check 504 does not appear.

Attachment via the AS/400 System

This section provides information, considerations, and restrictions for PC/3270 connections through an AS/400 system.

AS/400 System Setup

PC/3270 can connect to a host computer via one or more AS/400 systems by using the passthru function (usable with OS/400 Version 2.2.0 or later) supplied through an AS/400 system.

To use this function, set the following communication configuration descriptions in the AS/400 system to **on** (Vary On):

Line description
Controller description
Printer description

Error Messages from the AS/400 System

When this system is connected to an S/390 host system via the AS/400 system, the following message might appear on the screen.

AS/4 CPI5xxx

The following statuses are assumed as the reasons why this message appears:

Line error between the AS/400 system and the host system

Communication configuration description error in the AS/400 system

The communication configuration description in the AS/400 system is set off (Vary Off).

When this message appears, detailed error information is saved in the AS/400 system operator message queue. Refer to the error message that corresponds to the number displayed on the screen and then correct the cause of the error.

SNA Considerations

This section describes factors you should consider when configuring Personal Communications for use with SNA applications.

SDDLU

PC/3270 supports the self-defining dependent logical units (SDDLU) function of ACF/VTAM Version 3 Release 4.1 (MVS) or Version 3 Release 4 (VM). SDDLU provides the ability to dynamically create dependent LUs on predefined PUs and to reconfigure dependent LUs without interruption to any other user on the network and without intervention by system programming or operations staff.

PC/3270 SDDLU is supported for all connections except DFT (coaxial connection).

PC/3270 network stations support SDDLU by:

Accepting a format-1 Activate PU (ACTPU), which signals that VTAM requires a Network Management Vector Transport (NMVT) containing the Product Set ID (PSID) and LOCADDR of the LU.

A PC/3270 network station will use LOCADDRs 02, 03, 04, and so on, in that sequence, by default. However, if you specify the LU addresses explicitly, it will use the addresses that you specify.

Sending an unsolicited NMVT to VTAM when an LU switches on.

PSID Definitions: PC/3270 defines the default PSID for each LU type. Generally, the PSID contains such things as the machine type and the model number. The following table describes the machine type and model number definitions for each LU type supported by PC/3270.

Machine Type	Model Number	LU Type	Screen/Buffer Size
3270	002	Display Model 2 screen	24 rows by 80 columns
3270	003	Display Model 3 screen	32 rows by 80 columns
3270	004	Display Model 4 screen	43 rows by 80 columns
3270	005	Display Model 5 screen	27 rows by 132 columns
3270	DS2*	Printer 3270 data stream	24 rows by 80 columns

Attachment Considerations

Machine Type	Model Number	LU Type	Screen/Buffer Size
3270	DS3*	Printer 3270 data stream	32 rows by 80 columns
3270	DS4*	Printer 3270 data stream	43 rows by 80 columns
3270	DS5*	Printer 3270 data stream	27 rows by 132 columns
3270	00A	Display	48 rows by 80 columns
3270	00B	Display	62 rows by 160 columns
3270	00C	Display	24 rows by 132 columns

* PC/3270 assumes that 3270 data stream is the default printer-session type. If you use the SNA Character String (SCS) data stream, you must use a different designation for the PSID, such as 3270SCS. You must define this yourself, as shown in the next example.

Assigning User-Defined PSIDs: You can replace the default PSID values with your own definitions or define new PSIDs, by preparing a PSID definition file or by changing the Windows workstation profile. The PSIDs you use must be defined to VTAM.

Add a statement such as the following one to the [LU] definition in the workstation profile. This example supersedes the default PSID with LUA0001. `PSID = LUA 1`

Twinaxial Attachment (APPC)

This section describes considerations for twinaxial attachments (APPC).

Communication Trace

When you connect to the host by selecting **On** for the **Communication Trace** in the Customize Communication - Twinaxial Attachment (APPC) window, a trace buffer is assigned and the communication data is saved to it. To view the data in the trace buffer, run **PCSMON.EXE** in the **PC400** directory. The default trace buffer size is 50 KB, and the default trace entry size is the PIU size plus 4 (all of the communication data). If you want to change these values, edit the **[TDLC5250]** section in the workstation profile.

PCMCIA Adapter

The PC400 communication driver for the twinaxial attachment corresponds to the PCMCIA adapter. You do not have to use the driver supported with PCMCIA adapter. (You need the PCMCIA driver supported with OS/2, and the Socket Services driver and Resource Map Utility supported with PC400.)

Twinaxial Attachment (Console)

Use the twinaxial attachment only when your workstation is used as an AS/400 console. Do not attempt to use this feature when your workstation is being used as a standalone unit.

5250 Data Stream

The extended 5250 data stream for using the extended user interface, the Enhanced Non-programmable Terminal User Interface (ENPTUI), cannot be transferred from the host system.

Hotspots

Because Personal Communications treats all fields as unprotected fields, none of the 3-dimensional hotspot buttons appear. To make these buttons visible, add the following lines in your workstation profile:

```
[3DHotSpot]
ShowOnUPField=Y
```

Restrictions

You cannot use the **Setup API** functions of the File menu.

When you use twinaxial attachment (Console), you can only use **Copy** of the Edit functions.

You cannot use the file transfer function.

You cannot set the session type to **Printer**.

You cannot use multiple console sessions.

APIs are not supported.

The PC Organizer cannot be used.

The screen size is always 24 x 80, even if you specify 27 x 132.

You cannot use the mouse to move the cursor position.

Asynchronous Console

Use an asynchronous console only when a workstation is used as an AS/400 console. Do not use it in the usual operation. It is not a problem that OIA message 504 appears at IPL.

Restrictions

An asynchronous console has the following restrictions:

Multiple console sessions cannot be used.
APIs are not supported.
The session type cannot be set to the **Printer**.
The file transfer function is not supported.
The PC Organizer cannot be used.

Communication Manager/2 Attachment

You can attach PC400 to an AS/400 using Communication Manager/2 (CM/2) Advanced Program-to-Program Communication (APPC) services. There is no restrictions in using PC400 and Communication Manager/2, or PC400 and another application at the same time. Install or configure Communication Manager/2 before other products. You cannot configure PC400 before Communication Manager/2.

CM/2 Version

You need to have installed Communication Manager/2 Version 1.1 or later. PC400 will not operate on Communication Manager/2 Version 1.0.

CM/2 Installation and Configuration

Read the *Workstation Installation and Configuration Guide*, and configure 5250 emulation or APPC APIs. PC400 uses the attachment type, LU information, and information for 5250 mode that you specify here.

When you configure 5250 emulation, the 5250 terminal session and the printer session for Communication Manager/2 are also configured. You can run both Communication Manager/2 and PC400 at the same time.

When you configure APPC APIs, you can configure only what is needed for PC400. If you use **Quick Configuration**, the 5250 mode information and the partner information are not configured. In this case, configure them using **Advanced Configuration.**

The Personal Communications 5250-via-CM/2 attachment requires OS/2 User Profile Management Services, which can be installed with CM/2 or other programs; it also requires APPC. If you configured only the APPC APIs when you installed and configured CM/2, ***UPM will not have been installed***.

Therefore, before you can use the 5250-via-CM/2 attachment, you must install UPM using **Install Additional Functions** in the Communications Manager Setup, Options Menu. Of course, if UPM has already been installed by another product, such as the OS/2 LAN Requester or LAN Services, there is no need to install it again.

Read the SNA profile information in *Workstation Installation and Configuration Guide*, for Communication Manager/2 for the configuration operation. You can configure using the following values: default for mode, local node type for partner information, and network node (the AS/400 system must be the network node) for end node.

You do not need to reinstall or reconfigure 5250 emulation if it is already configured.

PC400 Configuration

You configure PC400 after you have installed or configured Communication Manager/2. Select **APPC5250 via CM/2** from Customize Communication. Read the help for an explanation of each parameter. You can make attachments without selecting Configuration, using the default values, however, you should check that the values are correct. You do not need to specify the workstation name. The configuration value of the Link Configuration is the value specified when you installed or configured Communication Manager/2. You need to change the Communication Manager/2 configuration to change these values.

Communication Manager/2 starts automatically when you start PC400. If you do not want Communication Manager/2 to start automatically, change the part on [CT] in the workstation profile as follows:

```
[CT]
.....
StartCM=N
```

If you want to stop Communication Manager/2 automatically when all PC400 sessions end, change the profile as follows:

```
[CT]
.....
StopCM=Y
StopCMconfirm=Y   ← (Issues a confirmation message.
                      If you do not want to issue a
                      message, specify; StopCMconfirm=N )
```

Attachment Considerations

If you click on the PC400 trace, you can capture the APPC API trace. If you want to capture a 5250 data trace, specify as follows. However, do not specify Y in ordinary use.

```
[CT]
.....
TraceDSPTdata=Y
```

Appendix C. AS/400 Configuration Examples

To connect PC400 to an AS/400 system, you need to specify configuration information in the workstation profile that accurately corresponds to the information specified in the AS/400 system (referred to as the *device description*).

For example, the LAN attachment via IEEE 802.2 in the following figure shows how the configuration information specified in the PC400 workstation profile corresponds to the configuration information in the AS/400 system.

© Copyright IBM Corp. 1989, 1996

Configuration Examples

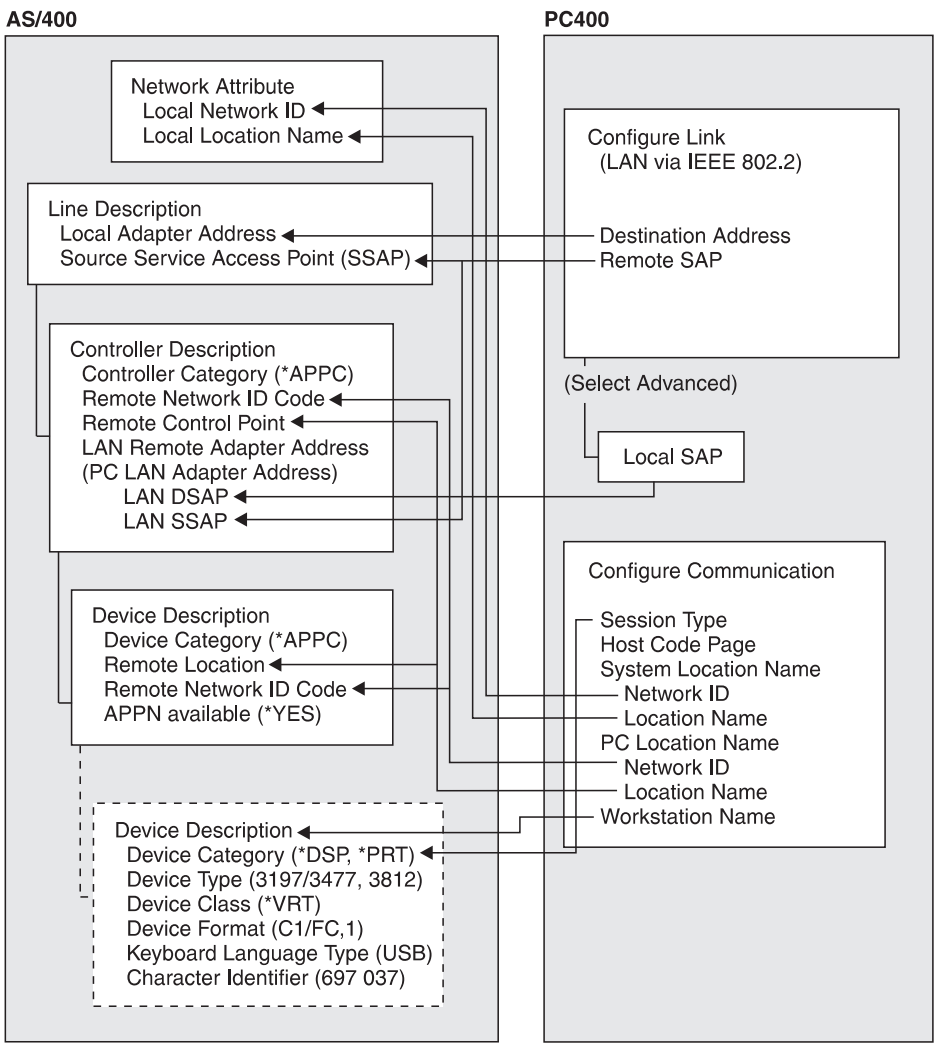

AS/400 Device Description

To configure 5250 display or printer sessions, the following values must be set in the AS/400 device description:

AS/400 Device Description	Display Session		Printer Session
	24 x 80	27 x 132	
Device category	*DSP	*DSP	*PRT
Device class	*VRT	*VRT	*VRT
Device type	3197	3477	3812
Device model	C1	FC	1
Keyboard language type	USB+	USB+	-
Character identify code	697 037+	697 037+	-
+ Depends on the host code page selection.			

5250 Sessions through One Link

If you want all your 5250 sessions to connect through one link to an AS/400 system, use the same **PC Location Name** and the same **Link Parameters** for all the sessions.

For example, you can configure two display sessions and one printer session connected to an AS/400 system using *APPN.PC5250* as the **Location Name**.

```
Session A    : Session Type            : Display
(Display)      System Location Name    :  APPN.S78 1234
                 PC Location Name      :   APPN.PC525
                 Workstation ID        :  (not specified)

Session B    : Session Type            : Display
(Display)      System Location Name    :  APPN.S78 1234
                 PC Location Name      :   APPN.PC525
                 Workstation ID        :  (not specified)

Session C    : Session Type            : Printer
(Printer)      System Location Name    :  APPN.S78 1234
                 PC Location Name      :   APPN.PC525
                 Workstation ID        :  PCLOCALP1
```

In this example, the AS/400 network attributes are:

```
Local network ID : APPN
Local location   : S78 1234
```

Note

Enter **DSPNETA** from a 5250 session to display AS/400 network attributes.

AS/400 System Mode Description

PC400 initially uses mode description **QPCSUPP** on the AS/400 system. If the PC Support/400 program or Client Access/400 is installed on the AS/400 system, QPCSUPP need not be created. If mode description QPCSUPP does not exist on the AS/400 system, create the mode description:

1 Enter the following command on the command line of the main menu of the AS/400 system:

CRTMODD

The Creating Mode Description panel appears.

```
                    Creating Mode Description (CRTMOD )

Type the selected items, and push the Enter key.

Mode Description................                  Name
Maximum Session................. 8          _______          1-512
Maximum number of interaction.... 8          _______          1-512
Number of Local Control Sessions. 4          _______          -512
Number of Pre-joined Sessions....            _______          -512
Inbound Pacing Value............. 7          _______          -63
Outbound Pacing Value............ 7          _______          -63
Maximum Length of Request Unit...  CALC      _______          241-16384,  CALC
Text Description ................  BLANK     ____________________________________

                                                                                 End
F3=Exit      F4=Prompt          F5=Reshow      F1 =Add parameter     F12= Cancel
F13=How to use this panel                  F24=More key
```

2 Type the necessary values in each field, according to the following table.

Field Name	Input Value
Mode description	**QPCSUPP**
Maximum session	**64**
Maximum number of interactions	**64**
Number of local control sessions	**0**
Number of pre-joined sessions	**0**
Inbound pacing value	**7**
Outbound pacing value	**7**
Maximum length of request unit	***CALC**
Text description	This field is optional

3 After you type all the values, press the Enter key.

This completes the creation of the mode description QPCSUPP.

AS/400 Device Description for Twinaxial Attachments (APPC) Example

If you want to use a twinaxial (TDLC) attachment, the AS/400 system requires that you specify a device description. When the automatic device configuration indicator (**QAUTOCFG**) is set to **ON** in the AS/400 system, the device description is created automatically. When the indicator is set to **OFF**, create the device description, as follows:

1 Enter the following command on the command line of the AS/400 system main menu:

```
CRTDEVDSP
```

The Creating Device Description(Display) panel appears.

Twinaxial Attachments

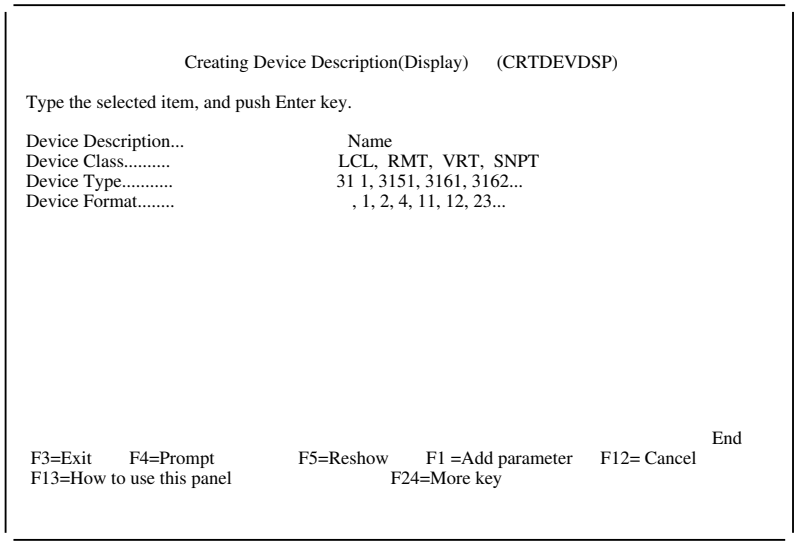

2 Type the values in each field, according to the following table.

Field Name	Input Value
Device description	This is an optional field
Device class	***LCL**
Device type	**5150**
Device format	**2**

3 After you type all values, press the Enter key.

The following screen appears:

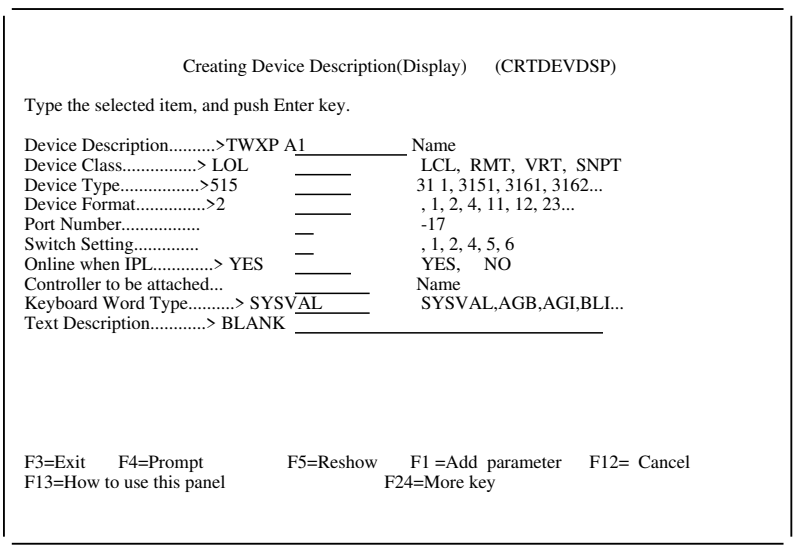

4 Type the values for each field, according to the following table.

Field Name	Input Value
Port number	Number of the port to be attached
Switch setting	Device address
Controller to be attached	Description name of the controller to be attached
Keyboard word type	**USB**[1]

[1] Depends on the host code page selection.

5 After you enter all the values, press the Enter key.

This completes the creation of the device description for the twinaxial attachment.

AS/400 Device Description for Asynchronous Attachments Example

If you want to use an asynchronous dial attachment, the AS/400 system requires that you specify configuration parameters for the controller/line/devices to be used.

The following sample is a typical configuration on the AS/400 system for an asynchronous dialed connection through an ASCII Workstation Controller.

1 Enter the following command on the command line of the AS/400 system main menu:

```
WRKCFGSTS  CTL CTL 3
```

where *CTL 3* is the name of your controller.

The Work with Configuration Status panel appears.

```
                          Work with Configuration Status

Position to . . . . . _____________    Starting characters

Type options, press Enter
   1=Vary on 2=Vary off 5=Work with job 8=Work with description
   9-Display mode status ...

 Opt     Description             Status             ----------Job----------
8_       CTL 3                     ACTIVE
__         ADLCTST                  VARY ON PENDING
__         ASYNC                    VARY ON PENDING
__         ASYNCD                   VARY ON PENDING
__         EZASYNC                  VARY ON PENDING
__         ASYNCP                   VARY ON PENDING
__         ASYNRTR                   ACTIVE

                                                                        BOTTOM
Parameters or command
 ===>

F3=Exit F4=Prompt F12=Cancel F23=More options F24=More keys
```

2 Enter 8 in the Opt field to work with the controller description for CTL03.

The Work with Controller Descriptions panel appears.

```
                        Work with Controller Descriptions

Position to . . . . . _____________   Starting characters

Type options, press Enter
     2=Change 3=Copy 4=Delete 5=Display 6=Print 7=Rename
     8=Work with status 9=Retrieve source 12=Print device addresses

Opt     Controller      Type   Text
2_      CTL 3             6141   CREATED BY AUTO-CONFIGURATION




                                                                      BOTTOM
Parameters or command
  ===>
F3=Exit F4=Prompt F5=Refresh F6=Create F9=Retrieve F12=Cancel
F14=Work with status
```

3 Enter 2 in the Opt field to change the controller description for CTL03.

The Change Controller Description panel appears.

```
                     Change Ctl Desc (local WS) (CHGCTLLWS)

Controller Description . . . . . : CTL 3
Option . . . . . :  BASIC
Category of controller . . . . . :  LWS

Controller type   . . . . . : 6141
Controller model . . . . . : 1
Resource name   . . . . . : CTL 3
TDLC line   . . . . . : QTDL429
Online at IPL   . . . . . :  YES
Auto-configuration controller   . . :  YES
Text . . . . . : CREATED BY AUTO-CONFIGURATION
Device wait timer   . . . . . : 1



Press Enter to continue.
  ===>
                                                                      BOTTOM
 F3=Exit  F4=Prompt  F5=Refresh  F12=Cancel  F13=How to use this display
F24=More keys
```

4 Type the values in each field, according to the following table.

Field Name	Input Value
Controller description	CTL03
Resource name	CTL03
Online at IPL	*YES
Device wait timer	10
Auto-configuration controller	*YES
Text description	This field is optional

The Work with Controller Descriptions panel appears.

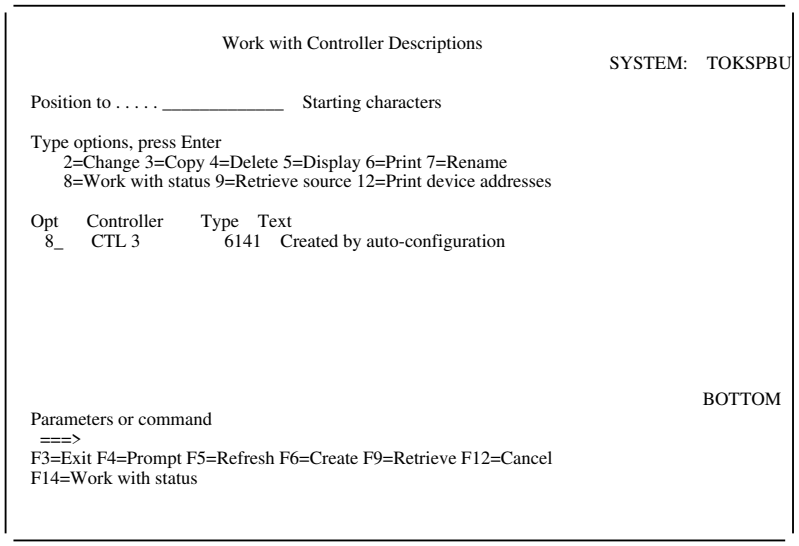

5 Enter 8 in the Opt field to work with the configuration status.

The Work with Configuration Status panel appears.

```
                          Work with Configuration Status

Position to . . . . . _____________   Starting characters

Type options, press Enter
   1=Vary on 2=Vary off 5=Work with job 8=Work with description
   9-Display mode status ...

 Opt    Description            Status            ----------Job----------
__      CTL 3                    ACTIVE
__        ADLCTST                  VARY ON PENDING
__        ASYNCPERTH               VARY ON PENDING
__        ASYNCD                   VARY ON PENDING
__        EZASYNC                  VARY ON PENDING
__        ASYNCP                   VARY ON PENDING
8_        ASYNRTR                  ACTIVE

                                                                        BOTTOM
Parameters or command
 ===>

F3=Exit F4=Prompt F12=Cancel F23=More options F24=More keys
```

6 Enter 8 in the Opt field next to ASYNRTR to work with the display device description.

The Work with Device Descriptions panel appears.

```
                          Work with Device Descriptions

Position to . . . . . _____________   Starting characters

Type options, press Enter
     2=Change 3=Copy 4=Delete 5=Display 6=Print 7=Rename
     8=Work with status 9=Retrieve source

Opt    Controller      Type    Text
 2_    ASYNRTR           515   FOR  PC4









                                                                        BOTTOM
Parameters or command
 ===>
F3=Exit F4=Prompt F5=Refresh F6=Create F9=Retrieve F12=Cancel
F14=Work with status
```

7 Enter 2 in the Opt field to change the device description.

The Change Device Description panel appears.

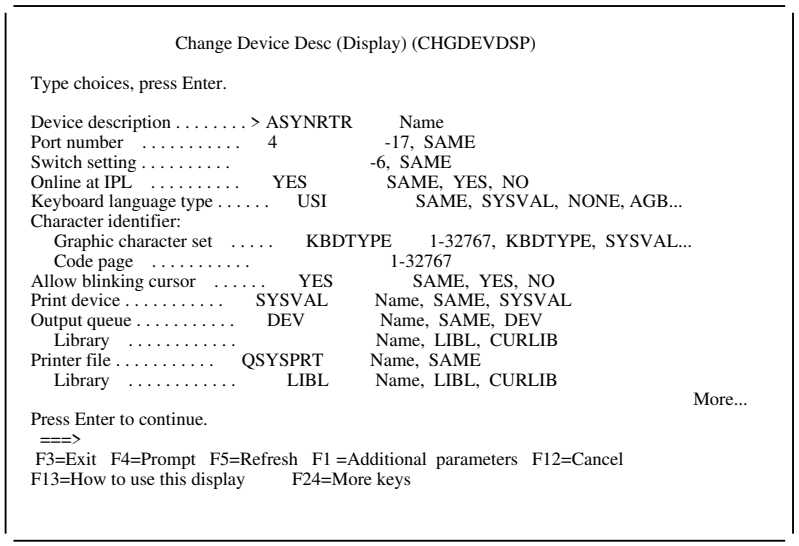

```
                    Change Device Desc (Display) (CHGDEVDSP)

Type choices, press Enter.

Device description . . . . . > ASYNRTR        Name
Port number  . . . . . .    4                 -17, SAME
Switch setting . . . . . .                    -6, SAME
Online at IPL  . . . . . .    YES             SAME, YES, NO
Keyboard language type . . . . . USI          SAME, SYSVAL, NONE, AGB...
Character identifier:
   Graphic character set  . . . . .  KBDTYPE    1-32767, KBDTYPE, SYSVAL...
   Code page  . . . . . .                     1-32767
Allow blinking cursor  . . . . . YES          SAME, YES, NO
Print device . . . . . .    SYSVAL            Name, SAME, SYSVAL
Output queue . . . . . .    DEV               Name, SAME, DEV
   Library  . . . . . .                       Name, LIBL, CURLIB
Printer file . . . . . .    QSYSPRT           Name, SAME
   Library  . . . . . .     LIBL              Name, LIBL, CURLIB
                                                                    More...
Press Enter to continue.
 ===>
 F3=Exit  F4=Prompt  F5=Refresh  F1 =Additional parameters  F12=Cancel
F13=How to use this display       F24=More keys
```

This completes the creation of the controller and display device descriptions for an asynchronous dial attachment.

AS/400 Device Description for Hayes AutoSync Attachments Example

If you want to use a Hayes AutoSync attachment, the AS/400 system requires that you specify configuration parameters for the controller/line/devices to be used.

The following sample is a typical configuration on the AS/400 system for an AutoSync connection either through an ASCII Workstation Controller (configured for a synchronous switched connection type) or the Electronic Customer Support (ECS) line.

1 Enter the following command on the command line of the AS/400 system main menu:

```
WRKCFGSTS  CTL CTL 3
```

where *CTL 3* is the name of your controller.

The Work with Configuration Status panel appears.

```
                    Work with Configuration Status

Position to . . . . . _______________    Starting characters

Type options, press Enter
    1=Vary on 2=Vary off 5=Work with job 8=Work with description
    9-Display mode status ...

 Opt     Description            Status            -------------Job--------------
8_       AUTOHAYES                 CONNECT PENDING
__       AUTONAGA                  VARIED OFF
__       AUTOSYNC                  VARIED OFF
__       AUTOSYNC1                 CONNECT PENDING



                                                                          BOTTOM
Parameters or command
  ===>

F3=Exit F4=Prompt F12=Cancel F23=More options F24=More keys
```

2 Enter 8 in the Opt field next to AUTOHAYES to work with the line description.

The Work with Line Descriptions panel appears.

```
                    Work with Line Descriptions

Position to . . . . . _______________    Starting characters

Type options, press Enter
     2=Change 3=Copy 4=Delete 5=Display 6=Print 7=Rename
     8=Work with status 9=Retrieve source

 Opt    Controller    Type    Text
  2_     AUTOHAYES       SDLC    Hayes Autosync Line for PC4




                                                                          BOTTOM
Parameters or command
  ===>
F3=Exit F4=Prompt F5=Refresh F6=Create F9=Retrieve F12=Cancel
F14=Work with status
```

3 Enter 2 in the Opt field to display the line description.

Hayes AutoSync Attachments

The Change Line Description panel appears.

```
                    Change Line Desc (SDLC) (CHGLINSDLC)

Type choices, press Enter.

Line description . . . . . > AUTOHAYES     Name
Resource names . . . . . .     LIN 51          Name, SAME
                 + for more values
Online at IPL  . . . . . .     YES             SAME, YES, NO
Vary on wait . . . . . .       YES             NOWAIT, 15-18 (1 second)
NRZI Data encoding . . . . . .     YES             SAME, YES, NO
Maximum controllers  . . . . . .   1               1-254, SAME
Clocking . . . . . .           MODEM           SAME, MODEM, LOOP
Line speed . . . . . .         96              SAME, 6 , 12 , 24 ...
Modem type supported . . . . . .   NORMAL          SAME, NORMAL, V54...
Modem data rate select . . . . . .     FULL            SAME, FULL, HALF
Switched connection type . . . . .     BOTH            SAME, BOTH, ANS, DIAL
Autoanswer . . . . . .         YES             SAME, YES, NO
Autodial . . . . . .           NO              SAME, YES, NO
Dial command type  . . . . . .     SAME            SAME, NONE, V25BIS
Calling number . . . . . .     NONE
                                                                        More...
 ===>
 F3=Exit  F4=Prompt  F5=Refresh  F12=Cancel  F13=How to use this display
F24=More keys
```

4 Type the required values and press Enter.

```
                    Change Line Desc (SDLC) (CHGLINSDLC)

Type choices, press Enter.

Station address  . . . . . > AUTOSYNC       1-FE, SAME
Connect poll retry . . . . . .     7               -64, SAME
Maximum frame size . . . . . .     521             SAME, 265, 521, 1 33, 2 57
Error threshold level  . . . . .   HALF            SAME, OFF, MIN, MED, MAX
Duplex . . . . . .             HALF            SAME, HALF, FULL
Modulus  . . . . . .           8               SAME, 8, 128
Maximum outstanding frames . . . .     BASIC           1-28, SAME
Inactivity timer . . . . . .       SDLC            NOMAX, 15 -42  ( .1 sec)
Poll response delay                            SAME            -2 48 (O.  1 seconds)
Nonproductive receive timer  . . .     32              16 -42  ( .1 seconds)
Idle timer . . . . . .         3               5-3  ( .1 seconds)
Connect poll timer . . . . . .     3               2-3  ( .1 seconds)
Poll cycle pause . . . . . .                       -2 48 ( .  1 seconds)
Frame retry  . . . . . .       7               -64, SAME
Data Set Ready drop timer  . . .   6               SAME, 3-6 (seconds)
Autoanswer type  . . . . . .       DTR             SAME, DTR, CDSTL
                                                                        More...
 ===>
 F3=Exit  F4=Prompt  F5=Refresh  F12=Cancel  F13=How to use this display
F24=More keys
```

Type the required values and press Enter.

```
                    Change Line Desc (SDLC) (CHGLINSDLC)

Type choices, press Enter.

Clear to Send timer  . . . . . .    25              SAME, 1 -6  (seconds)
Remote answer timer  . . . . . .    6               SAME, 3 , 35, 4  (seconds)...
Link speed . . . . . .  . . . .     96              SAME,  INTERFACE,  MIN...
Cost/connect time  . . . . . .      128             -255,  SAME,  CNN
Cost/byte  . . . . . .  . . . .     128             -255,  SAME,  CNN
Security for line  . . . . . .      NONSECURE       SAME,  NONSECURE...
Propagation delay  . . . . . .      TELEPHONE       SAME,  MIN,  LAN...
User-defined 1 . . . . . .  . .     128             -255,  SAME
User-defined 2 . . . . . .  . .     128             -255,  SAME
User-defined 3 . . . . . .  . .     128             -255,  SAME
Recovery limits:
   Count limit  . . . . . .  . .    2               -99,  SAME,  SYSVAL
   Time interval  . . . . . .  .    5               -12  (minutes)
Text 'description'  . . . . . .     'Hayes AutoSync Line for PC4
                                                                        Bottom
Press Enter to continue.
  ===>
 F3=Exit  F4=Prompt  F5=Refresh  F12=Cancel  F13=How to use this display
F24=More keys
```

Type the required values and press Enter.

The Work with Line Descriptions panel appears.

```
                        Work with Line Descriptions
                                                        SYSTEM:   TOK38SPB

Position to . . . . . _____________    Starting characters

Type options, press Enter
     2=Change 3=Copy 4=Delete 5=Display 6=Print 7=Rename
     8=Work with status 9=Retrieve source

 Opt    Controller    Type    Text
  __      AUTOHAYES     SDLC   Hayes  Autosync  Line  for  PC4









                                                                      BOTTOM
Parameters or command
  ===> ____________________________________________________________________
F3=Exit F4=Prompt F5=Refresh F6=Create F9=Retrieve F12=Cancel
F14=Work with status
```

This completes the creation of the line description for a Hayes AutoSync attachment.

Appendix D. Coexistence with Communications Manager/2 1.1

This appendix describes factors you should consider when you:

- Run Personal Communications at the same time as CM/2
- Use CM/2 as a communications subsystem for Personal Communications
- Migrate from CM/2 to Personal Communications

Note: These same considerations do not apply to OS/2 Access Feature.

Important

You might be using a CM/2 coaxial cable, twinaxial cable, SDLC, or Hayes AutoSync connection to provide 3270 or 5250 emulation with CM/2. If so, and you want to use the same connection with Personal Communications, disable the CM/2 connection and the sessions that use it, because these similar connections cannot coexist.

CONFIG.SYS Updates

When you install Personal Communications, its directory is added to the front of the **PATH**, **DPATH**, and **LIBPATH** statements. If CM/2 was installed previously on your workstation, the Personal Communications directory precedes CMLIB.

If you continue to use CM/2 SRPI and EHLLAPI applications, such as **SEND** and **RECEIVE**, the **ALMCOPY**, **CMMOUSE**, and **CMRTM** applications might be affected, as described in the following sections.

When you configure some Personal Communications connections, their device drivers might conflict with the CM/2 equivalents. For more information, refer to “Device Driver Coexistence” on page 117.

© Copyright IBM Corp. 1989, 1996

EHLLAPI and SRPI Applications

Note

Because the PATH, DPATH, and LIBPATH references to the Personal Communications directory precede those to CMLIB, existing CM/2 SRPI applications will try to work with Personal Communications instead of with CM/2.

EHLLAPI Applications

To support existing EHLLAPI applications written for CM/2, Personal Communications provides the same EHLLAPI entry name as CM/2 ACS3EHAP.DLL, but there are some limitations. For more information, refer to Appendix C, “Compatibility with CM/2” in the *Personal Communications Programmer’s Guide*,

SRPI Applications

The SRPI interface of Personal Communications has the same calls and parameters as CM/2, except that it does not support multiple, concurrent SRPI requester applications working with the same 3270 logical terminal session. Personal Communications provides the same entry name of SRPI.DLL to support existing CM/2 SRPI applications.

SEND or RECEIVE from the OS/2 Command Prompt

The SEND and RECEIVE applications start with the same command syntax as with CM/2. However, these commands invoke the Personal Communications versions of the applications because of the directory sequence in PATH, DPATH, and LIBPATH.

CM/2 Productivity Aids

ALMCOPY has been modified for Personal Communications, and a Presentation Manager interface, ACPM, has been added. The icon for ACPM is installed in the Productivity Tools folder.

If you still want to use the ALMCOPY applet provided with CM/2, rename ALMCOPY.EXE in the CMLIB directory to CM2COPY.EXE and then enter **CM2COPY** to start it.

CMMOUSE has been updated for Personal Communications but also works with CM/2. However, you can only install CMMOUSE by running A:\OS2INST.EXE from the *Personal Communications Utilities* diskette; this installs the CMMOUSE icons in the Productivity Tools folder.

CMRTM provides a response-time monitor for the LUA-via-CM/2 attachment and is installed in the Productivity Tools folder.

You can only install CMRTM by first unpacking and then installing the utility. To do this, insert the *Personal Communications Utilities* diskette into drive A. From an OS/2 command prompt, type unpack a:\cmrtm\cmrtm.pak and then press Enter to unpack the files and copy them to the current directory on your hard drive. Type RTMINST.CMD and then press Enter to install CMRTM. This installs the CMRTM icon in the Productivity Tools folder.

This version of CMRTM is intended to replace the older version that is in the CMLIB directory; it works with both Personal Communications and CM/2.

Device Driver Coexistence

Personal Communications coexists with CM/2 and uses CM/2 communication links for some types of attachment. However, for the following attachments, the device drivers are not compatible.

DFT Coaxial cable
SDLC
TDLC (Twinax)
Hayes AutoSync

Coexistence with CM/2

If you want to use Personal Communications with these links:

1. Disable the equivalent CM/2 link by removing its device driver.

   For example, CM/2 uses T1P1xDD.SYS for a twinax connection, but Personal Communications uses PCSTDLC.SYS. So when you configure Personal Communications for twinax, remove the CM/2 equivalent, T1P1xDD.SYS.

2. Either turn off the CM/2 emulator auto-start option so that it does not open sessions when you start CM/2, or remove the emulator sessions from the CM/2 configuration.

The VHAPI.OS2, the EHLLAPI virtual device driver (VDD), is also not compatible when you enable the Personal Communications DOS-mode EHLLAPI. Because the CM/2 equivalent has the same name, you must remove it.

Personal Communications displays a message when you need to make changes to the CONFIG.SYS device driver statements for one of the links listed, or for the VDD.

Refer to the *CM/2 Command Reference* for information about disabling these functions.

LUA Connection to CM/2

Personal Communications lets you configure sessions that use the LUA programming interface to connect to CM/2, which provides the link to the host.

Before you can configure Personal Communications, a CM/2 LUA configuration must be created and it must include a separate LU for each Personal Communications session that will connect to CM/2. When you configure Personal Communications, a list of the available LUs appears in the **LU Name** list. If you try to select one that has already been used, you are prompted to choose another.

5250-via-CM/2 Attachment

The Personal Communications 5250-via-CM/2 attachment requires OS/2 User Profile Management Services (UPM), which can be installed with CM/2 or other programs; it also requires APPC. If, however, when you install and configure CM/2, you configure only the APPC APIs, ***UPM is not installed***.

Therefore, before you can use the 5250-via-CM/2 attachment, you must install UPM using the Install Additional Functions in Communications Manager Setup, Options menu. Of course, if UPM has already been installed by another product, such as the OS/2 LAN Requester or LAN Services, there is no need to install it again.

CM/2 Keyboard Layout

The CM/2 and Personal Communications default keyboard layouts are very similar, but some key-functions differ such as the End key. If you have been using CM/2 and prefer to keep the CM/2 keyboard layout, you can use one of the keyboard layout files:

CM101_*x*.KMP
CM122_*x*.KMP
where *x* = 3 for the 3270 keyboard layout
= 5 for the 5250 keyboard layout
= C for the combined keyboard layout

To enable one of these keyboard layouts:

1. Select **Keyboard Setup** from the Assist menu.
2. Select the **User-Defined** radio button, select **Browse**, and then double-click the appropriate file in the list.

FFST/2 - Error Log/Dump Facility

Personal Communications provides an error log and dump facility where information about critical errors and some internal errors is recorded. Before you can use this facility, you must have the FFST/2 utilities, which are provided by Communications Manager/2, OS/2 LAN Services, and other IBM products.

If FFST/2 has been installed and you encounter a problem, check whether any messages have been recorded as Personal Communications error logs in **PCSPROBE.DAT** or dumps in **PCSPROBE.DMP**. If these files exist, they were saved in the PCOMOS2 directory. To view them, start the FFST/2 Message Log Formatter and Dump Formatter in the FFST/2 folder.

You can also see more detailed information about Personal Communications error records through the FFST/2 System Error Log utility. Although you might see records that relate to other products, you can find Personal Communications errors by comparing the Problem IDs, which are unique for each error, with those displayed in the Message Log Formatter.

If CM/2 is not installed on your workstation, you probably do not have FFST/2 installed. In this case, Personal Communications records error logs to PCSPROBE.DMP.

Appendix E. Default Key Function Assignments

This appendix lists the functions assigned, by default, to each key on your keyboard.

For more information about each function, refer to the **Keyboard** choice on the Help menu.

Default Key Functions for PC/3270

Table 3 shows the default key functions for PC/3270. The column for the Enhanced keyboard applies to both the 101-key, 102-key, and 104-key keyboards, as well as the Space-Saving keyboard.

Table 3 (Page 1 of 3). Default Key Functions for PC/3270

Function of Key	Enhanced Keyboard	Host-Connected Keyboard
APL	Ctrl+F8	Ctrl+F8
Attention	Esc	Attn
Alternate Cursor	Alt+F11	AltCr
Backspace	— (Backspace)	—
Back Tab	Shift+— |	| —
Back Tab Word	Alt+←	Alt+←
Break	Break	Ctrl+Space(pad)
Change Format Toggle	Alt+F3	Alt+F3
Change Screen	Ctrl+PageUp	ChgSc
Clear	Pause	Clear
Color Blue	Ctrl+Shift+F5	Alt+F17
Color Field Inherit	Ctrl+Shift+F8	Alt+F20
Color Green	Ctrl+Shift+F3	Alt+F15
Color Pink	Ctrl+Shift+F2	Alt+F14
Color Red	Ctrl+Shift+F1	Alt+F13
Color Turquoise	Ctrl+Shift+F6	Alt+F18
Color White	Ctrl+Shift+F7	Alt+F19
Color Yellow	Ctrl+Shift+F4	Alt+F16
Cursor Blink	Ctrl+F10	CrBnk
Cursor Down	↓ or 2(pad)	↓

© Copyright IBM Corp. 1989, 1996

Key Functions and Assignments

Table 3 (Page 2 of 3). Default Key Functions for PC/3270

Function of Key	Enhanced Keyboard	Host-Connected Keyboard
Cursor Left	← or 4(pad)	←
Cursor Right	→ or 6(pad)	→
Cursor Select	Ctrl+F9	CrSel
Cursor Up	↑ or 8(pad)	↑
Delete Character	Delete or .(pad)	Delete
Delete Word	Ctrl+Delete or Ctrl+.(pad)	DelWd
Document Mode Toggle	Alt+F1	Alt+F1
Dup	Shift+Insert	Dup
Edit Copy	Ctrl+Insert	Ctrl+Insert
Edit Cut	Shift+Delete	Shift+Delete
Edit Paste	Shift+PageDown or Ctrl+Shift+Insert	Shift+Insert
Edit Undo	Alt+ — (Backspace)	Alt+ —
End Field	Pad End	Not assigned
Enter	Enter	Enter
Enter/Control	Right Ctrl	Enter
Erase EOF	End	ErEOF
Erase Field	Shift+End	Not assigned
Erase Input	Alt+End	ErInp
Fast Cursor Down	Alt+↓ or Alt+2(pad)	Alt+↓
Fast Cursor Up	Alt+↑ or Alt+8(pad)	Alt+↑
Field Mark	Shift+Home	FldMk
Graphic Cursor	Alt+F12	Alt+F24
Highlighting Field Inherit	Alt+3(pad)	Alt+F12
Highlighting Reverse	Alt+*(pad)	Ctrl+F9
Highlighting Underscore	Alt+6(pad)	Ctrl+F11
Home	Home or 7(pad)	Alt+Rule
Insert	Insert or 0(pad)	Insert
Jump Next	Alt+PageUp	Jump
New Line	↵ (Enter)	↵
Mark Down	Shift+↓	Shift+↓
Mark Left	Shift+←	Shift+←
Mark Right	Shift+→	Shift+→
Mark Up	Shift+↑	Shift+↑
Move Mark Down	Ctrl+↓ or Ctrl+2(pad)	Ctrl+↓
Move Mark Left	Ctrl+← or Ctrl+4(pad)	Ctrl+←

Table 3 (Page 3 of 3). Default Key Functions for PC/3270

Function of Key	Enhanced Keyboard	Host-Connected Keyboard
Move Mark Right	Ctrl+→ or Ctrl+6(pad)	Ctrl+→
Move Mark Up	Ctrl+↑ or Ctrl+8(pad)	Ctrl+↑
PA1	Alt+Insert	PA1
PA2	Alt+Home	PA2
PA3	Shift+PageUp	PA3
Pause	Ctrl+F7	Pause
PF1 to PF12	F1 to F12	F1 to F12
PF13 to PF24	Shift+F1 to F12	F13 to F24
Play	Ctrl+F6	Play
Program Symbol A	Ctrl+Shift+(pad)1	Ctrl+Shift+(pad)1
Program Symbol B	Ctrl+Shift+(pad)2	Ctrl+Shift+(pad)2
Program Symbol C	Ctrl+Shift+(pad)3	Ctrl+Shift+(pad)3
Program Symbol D	Ctrl+Shift+(pad)4	Ctrl+Shift+(pad)4
Program Symbol E	Ctrl+Shift+(pad)5	Ctrl+Shift+(pad)5
Program Symbol F	Ctrl+Shift+(pad)6	Ctrl+Shift+(pad)6
PS Field Inherit	Ctrl+Shift+(pad)0	Ctrl+Shift+(pad)0
Print (Local Copy)	Not assigned	Not assigned
Quit (Device Cancel)	Alt+Left Ctrl	Alt+Left Ctrl
Record	Ctrl+F5	Record
Reset/Control	Left Ctrl	Left Ctrl
Response Time Monitor	Ctrl+F11	Ctrl+F19
Rule	Ctrl+Home	Rule
Sys Request	Alt+PrintScreen	SysRq
Tab Field	— | or Shift+— |(pad)	— | or — |(pad)
Tab Word	Alt+→	Alt+→
Test	Ctrl+PageDown	Test
Transparency Field Inherit	Ctrl+Shift+8(pad)	Ctrl+Shift+9(pad)
Transparency Opaque	Ctrl+Shift+/(pad)	Ctrl+Shift+*(pad)
Word Wrap Toggle	Alt+F2	Alt+F2

Includes the 101-key and 102-key keyboard. The Space Saving keyboard is like the Enhanced keyboard with the keypad omitted.
Indicates the key on the main keyboard.
(*pad*) Indicates a key on the numeric keypad.

Note: The Enhanced keyboard and the Host-Connected keyboard have some duplicated keys. The functions of the duplicated keys are the same except when you specify a single key. For example, *Del* means any Delete key, whereas *Pad Del* specifies only the Delete key on the numeric keypad.

Default Key Functions for PC400

Table 4 shows the default key functions for PC400. The column for the Enhanced keyboard applies to both the 101-key, 102-key, and 104-key keyboards, as well as the Space-Saving keyboard.

Note: If you use PC400 from the combined package, see "Default Key Functions for the Combined Package" on page 127.

Table 4 (Page 1 of 3). Default Key Functions for PC400

Function of Key	Enhanced Keyboard	122 Keyboard
Alternate Cursor	Ctrl+F11	AltCr
Attention	Esc	Attn
Backspace	— (Backspace)	—
Backtab	Shift+— |	| —
Backtab Word	Alt+←	Alt+←
Begin Bold	Ctrl+B	Ctrl+B
Begin of line	Ctrl+4(pad)	Ctrl+4(pad)
Begin Underscore	Ctrl+U	Ctrl+U
Bottom of Page	Ctrl+2(pad)	Ctrl+2(pad)
Carrier Return	Ctrl+Enter or Ctrl+– (pad) or Ctrl++ (pad)	Ctrl+– (pad) or Ctrl+— | (pad)
Center Text	Ctrl+C	Ctrl+C
Clear	Pause	Clear
Cursor Blink	Ctrl+F10	CrBnk
Cursor Down	↓ or 2(pad)	↓
Cursor Left	← or 4(pad)	←
Cursor Right	→ or 6(pad)	→
Cursor Up	↑ or 8(pad)	↑
Delete Character	Delete or .(pad)	Delete
Delete Word	Ctrl+Delete or Ctrl+.(pad)	DelWd
Display Text Code	Alt+Insert	Alt+Insert
Dup	Shift+Insert	PA1
Edit Copy	Ctrl+Insert	Ctrl+Insert
Edit Cut	Shift+Delete	Shift+Delete
Edit Paste	Shift+PageDown or Ctrl+Shift+Insert	Shift+Insert
Edit Undo	Alt+ — (Backspace)	Alt+ —
End Bold/Underscore	Ctrl+J	Ctrl+J
End of line	Ctrl+6(pad)	Ctrl+6(pad)

Table 4 (Page 2 of 3). Default Key Functions for PC400

Function of Key	Enhanced Keyboard	122 Keyboard
End of page	Ctrl+P	Ctrl+P
Enter/Control	Enter/Ctrl	Enter
Erase EOF	End or 1(pad)	ErEOF
Erase Input	Alt+End	ErInp
Fast Cursor Down	Alt+↓ or Alt+2(pad)	Alt+↓
Fast Cursor Up	Alt+↑ or Alt+8(pad)	Alt+↑
Field Exit	Enter(pad) or ↵ (Enter)	Enter(pad) or ↵
Field Mark	Shift+Home	PA2
Field Minus (–)	–(pad)	Alt+–(pad)
Field Plus (+)	+ (pad)	Alt+— |(pad)
Half Index Down	Ctrl+H	Ctrl+H
Half Index Up	Ctrl+Y	Ctrl+Y
Help	Alt+F1	Alt+F1
Home	Home or 7(pad)	Alt+Rule
Host Print	Ctrl+Pause	Alt+F13
Insert	Insert or 0 (pad)	Insert
Insert Symbol	Ctrl+A	Ctrl+A
Jump Next	Alt+PageUp	Jump
Mark Down	Shift+↓	Shift+↓
Mark Left	Shift+←	Shift+←
Mark Right	Shift+→	Shift+→
Mark Up	Shift+↑	Shift+↑
Move Mark Down	Ctrl+↓	Ctrl+↓
Move Mark Left	Ctrl+←	Ctrl+←
Move Mark Right	Ctrl+→	Ctrl+→
Move Mark Up	Ctrl+↑	Ctrl+↑
New Line	Shift+ ↵ (Enter)	Shift+ ↵
Next Column	Ctrl+D	Ctrl+D
Next Stop	Ctrl+N	Ctrl+N
Pause	Ctrl+F7	Pause
PF1 to PF12	F1 to F12	F1 to F12
PF13 to PF24	Shift+F1 to F12	F13 to F24
Play	Ctrl+F6	Play
Quit	Alt+Left Ctrl	Alt+Left Ctrl
Record	Ctrl+F5	Record
Required Backspace	Ctrl+ — (Backspace)	Ctrl+ —
Required Space	Ctrl+Space	Ctrl+Space

Key Functions and Assignments

Table 4 (Page 3 of 3). Default Key Functions for PC400

Function of Key	Enhanced Keyboard	122 Keyboard
Required Tab	Ctrl+— |	Ctrl+— |
Reset/Control	Left Ctrl	Left Ctrl
Roll Down	9(pad) or PageUp	9(pad)
Roll Up	3(pad) or PageDown	3(pad)
Rule	Ctrl+Home	Rule
Stop Code	Ctrl+S	Ctrl+S
System Request	Alt+PrintScreen	SysRq
Tab Field	— |	— | or — |(pad)
Tab Word	Alt+→	Alt+→
Test Request	Alt+Pause	Alt+Copy
Top of Page	Ctrl+8(pad)	Ctrl+8(pad)
Word Underscore	Ctrl+W	Ctrl+W

(pad) indicates a key on the numeric keypad.

Default Key Functions for the Combined Package

Table 5 shows the default key functions for the combined package. The column for the Enhanced keyboard applies to both the 101-key, 102-key, and 104-key keyboards, as well as the Space-Saving keyboard.

When you use Personal Communications from the combined package, the PC400 key assignments are added to the default key function assignments for Personal Communications.

Table 5. Default Key Functions for the Combined Package

Function of Key	Enhanced Keyboard	Host-Connected Keyboard
Change Screen	Not assigned	ChgSc
Character Advance	Shift+BackSpace	Not assigned
Help	Not assigned	Ctrl+F1
Host Print	Not assigned	Ctrl+F13
PA3	Not assigned	PA3
Roll Down	PageUp	Not assigned
Roll Up	PageDown	Not assigned

You can change the default key assignments to the following default function tables, by selecting **Keyboard Setup** from the Assist menu:

KEYMAP_3270 (for PC/3270)
KEYMAP_5250 (for PC400)
KEYMAP_CONV (for the combined package)

The default function table setting is stored in your PCSWIN.INI file:

```
[KEYBOARD]
CuaKeyboard=n
```

where *n* indicates the emulation types installed:

3 for 3270 keyboard layout
5 for 5250 keyboard layout
c for combined keyboard layout

Notices

References in this publication to IBM products, programs, or services do not imply that IBM intends to make these available in all countries in which IBM operates. Any reference to an IBM product, program or service is not intended to state or imply that only IBM's product, program, or service may be used. Subject to IBM's valid intellectual property or other legally protectable rights, any functionally equivalent product, program, or service may be used instead of the IBM product, program, or service. Evaluation and verification of operation in conjunction with other products, programs, or services, except those expressly designated by IBM, are the user's responsibility.

IBM may have patents or pending patent applications covering subject matter in this document. The furnishing of this document does not give you any license to these patents. You can send license inquiries, in writing, to the IBM Director of Licensing, IBM Corporation, 500 Columbus Avenue, Thornwood, NY 10594, U.S.A.

For license inquiries regarding double-byte character set (DBCS) information, contact:

IBM World Trade Asia Corporation Commercial Relations
IBM Kamiya-cho Building, 4-3-9 Toranomon, Minato-ku
Tokyo, Japan

Licensees of this program who wish to have information about it for the purpose of enabling: (i) the exchange of information between independently created programs and other programs (including this one) and (ii) the mutual use of the information which has been exchanged, should contact:

Site Counsel
IBM Corporation
P.O. Box 12195
3039 Cornwallis
Research Triangle Park, NC 27709-2195
USA

Such information may be available, subject to appropriate terms and conditions, including in some cases, payment of a fee.

The licensed program described in this document and all licensed material available for it are provided by IBM under terms of the IBM Customer Agreement.

This document is not intended for production use and is furnished as is without any warranty of any kind, and all warranties are hereby disclaimed including the warranties of merchantability and fitness for a particular purpose.

© Copyright IBM Corp. 1989, 1996

Trademarks

The following terms are trademarks of the IBM Corporation in the United States or other countries or both:

ACF/VTAM
Advantis
IBM Global Network Connection
AnyNet
APL2
APPN
AS/400
CICS
Client Access/400
DisplayWrite
FFST/2
GDDM
IBM
IIN
Micro Channel
OfficeVision
OfficeVision/400
OS/2
OS/400
PowerPC
Presentation Manager
PS/2
SAA
S/390
Systems Application Architecture
System/36
System/370
System/38
System/390
VTAM
400

Windows is a trademark of Microsoft Corporation.

PC Direct is a trademark of Ziff Communications Company and is used by IBM Corporation under license.

UNIX is a registered trademark in the United States and other countries licensed exclusively through X/Open Company Limited.

Other company, product, and service names, which may be denoted by a double asterisk (**), may be trademarks or service marks of others.

Index

Numerics

32-bit APIs
  APPC viii
  CPI-C viii
3270 emulation 1
3270 Emulation Credit Card 83
3270 passthru 92
5250 emulation 1

A

adapter card 20
adapters
  3270 Emulation Credit Card 83
  communication 75
  Ethernet 83
  PCMCIA 79
  Token-Ring 83
Advantis (IIN) 89
AnyNet viii
APPC API viii
appearance 43
AS/400
  3270 passthru 92
  configuration examples 99
  device description
    for asynchronous attachments 106
    for Hayes AutoSync attachments 110
    for twinaxial attachment 103
  error messages 92
  system mode description 102
  system setup 92
assigning
  a drive 56
  user-defined PSIDs 94
assist functions 47
asynchronous attachment, AS/400 device description 106
automatically starting sessions 32

B

batch file
  creating 28
  editing 31
  i option 29
  q option 29
  s option 29
  using 27

C

changing a workstation profile 23
character sequences, unsupported 91
coax attachment, considerations 81
color mapping 43
communication check 50x 92
Communications Manager
  attachment considerations 96
  coexistence 115
  configuring 11
  installation and configuration 96
  migrating 17
  migrating from 12
configuration
  changing 23
  creating 19
  for host connections 19
  information 99
  saving 21
configuring
  AS/400 99
  PC400 99
  sessions 19
considerations and restrictions
  Advantis (IIN) 89
  asynchronous console 96
  attachment via AS/400 system 92
  CM/2 attachment 96
  coax attachment 81
  console sessions 95
  Hayes AutoSync 90
  Home3270 91
  IBM Global Network Connection 90

© Copyright IBM Corp. 1989, 1996

considerations and restrictions *(continued)*
LAN via IEEE 802.2 83
LAN via NetWare 84
SDDLU 93
SDLC 87
SNA 93
TCP/IP attachment 86
twinaxial (APPC) 94
twinaxial (console) 95
contacting IBM 70
Controller Language for CUT Attachment 82
conventions used in this book vii
copylink 38
CPI-C API viii
creating
a batch file 28
a configuration 19
a macro 51
the AS/400 system mode description 102
CUT attachment, functions not available 82

D

data transfer
description 53
types of 53
DDE/EHLLAPI 37
default key functions
combined package 127
PC/3270 package 121
PC400 package 124
definitions, PSID 93
desktop 25
developer's assistance program 74
device description
AS/400 101
for asynchronous attachments 106
for Hayes AutoSync attachments 110
for twinaxial attachments (APPC) 103

E

emulator sessions
exiting 32
stopping 32
enabling DDE/EHLLAPI 37
error messages from the AS/400 system 92
existing batch file 31
exiting sessions 32

F

file transfer 41
fonts 43
functions not available with CUT attachment 82

G

Global Network 90

H

hardware requirements 9
Hayes AutoSync
AS/400 device description 110
considerations 90
performance 90
hiding
the menu bar 45
the tool bar 45
windows 33
Home3270 91
hotspots
setup 47
using 48
how to
perform communication check 50x 92

I

i option 29
IBM Global Network Connection considerations 90
IBM service 70
icons, for macros 44
IEEE 802.2 API ix
IIN 89
installation
description 11
from a network server 14
from diskettes 12
parameters 15
Personal Communications Utilities 13
to a network server 14
internet 44
interrupt conflict between SDLC adapter and COM2 89
introduction of Personal Communications 1

K

key functions
  assignments 121
  default 121, 123
  uses of 47
keyboard
  functions 124
  setup 49
keyboard/macro functions 47

L

LAN adapter considerations 83
LAN via IEEE 802.2 attachment 83
LAN via NetWare (consideration) 84
licensing agreement 129
line speed
  Advantis (IIN) attachment 90
  Home3270 attachment 91
  SDLC attachment 87

M

machine check 207 81
macro
  description of 51
  usage 51
memory requirements 10
migrating
  from CM/2 16
  from Personal Communications V4.0 16
modems
  configuration for Advantis (IIN) 90
  connection to a 7855 88
  supported 77, 78
mouse
  file 51
  setup 50
MPTS
  description ix
  workstation requirements 10
Multi-Protocol Transport Services ix
multiple sessions 27

N

NetBIOS API ix
NetWare for SAA
  attachment considerations 84

O

online help 67
Organizer, PC 61
OS/2 Access Feature viii
OS/2 command prompt 27

P

passthru 92
pastelink 38
PC Organizer 61
PCMCIA configuration 83
PCOMM forum 73
PCSWS.EXE 27
Personal Communications
  functions 4
  library 69
  overview 1
  removing 15
planning 9
pop-up keypad
  (poppad) file 50
  setup 49
  using 50
print screen 35
printer 35
  definition tables 35
  drivers 35
printing
  description 35
  host-addressable 86
processing environment 9
PSID definitions 93

Q

q option 29

R

receiving data from the host 54
related publications 69
releasing drives 56
removing Personal Communications 15
requirements
  description 9
  memory 10
  planning 9
  software 10

requirements *(continued)*
storage 9
router session
Data Transfer 53
description of 4
Shared Folders 55
running
copylink 38
pastelink 38

S

s option 29
sample
AS/400 device description for twinaxial attachment 103
AS/400 device descriptions for asynchronous attachments 106
AS/400 device descriptions for Hayes AutoSync attachments 110
PC400 configuration 101
saving
configuration information 21
memory 87
SDDLU 93
SDLC attachment
considerations 87
performance consideration 88
sending data to the host 53
service, statement 70
sessions
automatically starting 32
configuration 19
exiting 32
icons for 25
IDs for 29
multiple 27
router 53, 55
starting 25
starting specific session ID 29
stopping 32
window 25
setting up
the mouse 51
shared folders
assigning a drive 56
command restrictions 58
overview 55
releasing drives 56
starting 55
sharing
a LAN adapter 84
the interrupt level 89
showing
the menu bar 45
the tool bar 45
windows 33
SNA considerations 93
software requirements 10
Software Solutions Center 74
spreadsheet, copying table data 38
starting
from the session window 26
multiple sessions 27
sessions 25
shared folders 55
with a batch program 27
stopping
sessions 32
storage requirements 9

T

TCP/IP
connection considerations 86
technical assistance 70
text assist 63
text conventions vii
tool bar setup 43, 44
trademarks 130
transferring
a window's appearance 43
data 53
files 41
trim print 35
twinax (console) 95
twinaxial attachment, AS/400 device description 103

U

unsupported character sequences 91
using
a macro 51
an Ethernet adapter 83
text assist 63
the PC organizer 61
utilities diskette 13

W

WebExplorer 44
window
  appearance 43
  setup 43
  view 33
workstation profile 21, 27

Communicating Your Comments to IBM

Personal Communications
AS/400 and 3270 for OS/2
Up and Running
Version 4.1

Publication No. SC31-8258-00

If you especially like or dislike anything about this book, please use one of the methods listed below to send your comments to IBM. Whichever method you choose, make sure you send your name, address, and telephone number if you would like a reply.

Feel free to comment on specific errors or omissions, accuracy, organization, subject matter, or completeness of this book. However, the comments you send should pertain to only the information in this manual and the way in which the information is presented. To request additional publications, or to ask questions or make comments about the functions of IBM products or systems, you should talk to your IBM representative or to your IBM authorized remarketer.

When you send comments to IBM, you grant IBM a nonexclusive right to use or distribute your comments in any way it believes appropriate without incurring any obligation to you.

If you are mailing a readers' comment form (RCF) from a country other than the United States, you can give the RCF to the local IBM branch office or IBM representative for postage-paid mailing.

If you prefer to send comments by mail, use the RCF at the back of this book.

If you prefer to send comments by FAX, use this number:

United States and Canada: **1-800-227-5088**

If you prefer to send comments electronically, use this network ID:

- IBM Mail Exchange: **USIB2HPD at IBMMAIL**
- IBMLink: **CIBMORCF at RALVM13**
- Internet: **USIB2HPD@VNET.IBM.COM**

Make sure to include the following in your note:

Title and publication number of this book
Page number or topic to which your comment applies.

Help us help you!

Personal Communications
AS/400 and 3270 for OS/2
Up and Running
Version 4.1

Publication No. SC31-8258-00

We hope you find this publication useful, readable and technically accurate, but only you can tell us! Your comments and suggestions will help us improve our technical publications. Please take a few minutes to let us know what you think by completing this form.

Overall, how satisfied are you with the information in this book?	Satisfied	Dissatisfied

How satisfied are you that the information in this book is:	Satisfied	Dissatisfied
Accurate		
Complete		
Easy to find		
Easy to understand		
Well organized		
Applicable to your task		

Specific Comments or Problems:

Please tell us how we can improve this book:

Thank you for your response. When you send information to IBM, you grant IBM the right to use or distribute the information without incurring any obligation to you. You of course retain the right to use the information in any way you choose.

Name

Address

Company or Organization

Phone No.

Help us help you!
SC31-8258-00

IBM

Cut or Fold
Along Line

Fold and Tape **Please do not staple** Fold and Tape

NO POSTAGE
NECESSARY
IF MAILED IN THE
UNITED STATES

BUSINESS REPLY MAIL

FIRST-CLASS MAIL PERMIT NO. 40 ARMONK, NEW YORK

POSTAGE WILL BE PAID BY ADDRESSEE

Information Development
Department CGMD
International Business Machines Corporation
PO BOX 12195
RESEARCH TRIANGLE PARK NC 27709-9990

Fold and Tape **Please do not staple** Fold and Tape

SC31-8258-00

Cut or Fold
Along Line

IBM®

Part Number: 39H3413

Printed in the United States of America.

SC31-8258-

39H3413

Spine information:

IBM

Personal Communications
AS/400 and 3270 for OS/2

Up and Running

Version 4.1