Personal Communications
AS/400 and 3270 for Windows

IBM

Up and Running

Version 4.1

SC31-8261-00

Personal Communications
AS/400 and 3270 for Windows

IBM

Up and Running

Version 4.1

© ODBC is copyrighted by Microsoft Corporation.

SC31-8261-00

Note

Before using this information and the product it supports, be sure to read the general information under “Notices” on page 159.

First Edition (March 1996)

This edition is a major revision of the *Personal Communications AS/400 and 3270 for Windows Version 4.0 User's Guide*, *S20H-1770-01*, and *Personal Communications AS/400 for Windows Version 4.0 User's Guide*, *S20H-1641-01*. These books are available for ordering.

This edition applies to Version 4.1 of Personal Communications and to all subsequent releases and modifications until otherwise indicated in new editions or technical newsletters. Make sure you are using the correct edition for the level of the product.

Order publications through your IBM representative or the IBM branch office serving your locality. Publications are not stocked at the address below.

IBM welcomes your comments. A form for readers' comments may be provided at the back of this publication, or you may address your comments to the following address:

International Business Machines Corporation
Department CGMD
P.O. Box 12195
Research Triangle Park, North Carolina
27709-2195

When you send information to IBM, you grant IBM a nonexclusive right to use or distribute the information in any way it believes appropriate without incurring any obligation to you.

© **Copyright International Business Machines Corporation 1989, 1996. All rights reserved.**
Note to U.S. Government Users — Documentation related to restricted rights — Use, duplication or disclosure is subject to restrictions set forth in GSA ADP Schedule Contract with IBM Corp.

Contents

About This Book ix
Text Conventions Used in This Book ix
What's in this Package x

Chapter 1. Welcome to Personal Communications for Windows 1
Personal Communications Program Window 2
Personal Communications Sessions 4
Personal Communications Connections 4
System/390 Connections 5
AS/400 Connections 6
System/3X Connection 6
Supported PC400 Functions 7
What's New in Personal Communications V4.1 8

Chapter 2. Getting Ready to Install Personal Communications 15
Workstation Hardware 15
Workstation Hard Disk Requirements 16
Workstation Memory Requirements 16
Workstation Software 17

Chapter 3. Installing Personal Communications 19
Installation 19
Diskette Installation 19
Network Installation 21
Installing with Preconfigured Profiles or Batch Files 23
Migrating from a Previous Version 24
Removing Personal Communications 24

Chapter 4. Configuring a Session 25
Creating a Configuration 25
Saving Configuration Information 27
Changing Configuration Information 28

Chapter 5. Using Sessions 31
Starting Sessions 31
Starting by Selecting the Session Icon 32
Starting from a Session Window 32
Starting a Workstation Profile from the Program Manager 33
Starting Multiple Sessions 33
Creating a Batch File 34
Using a Batch File 36
Editing an Existing Batch File 37
Starting Multiple Sessions without a Batch File 37

© Copyright IBM Corp. 1989, 1996

Automatically Starting Sessions 38
Stopping Sessions 38

Chapter 6. Managing Sessions 39
Getting Help 39

Chapter 7. Printing 41
Setting Up the Printer 41
PDT Files 42
Setting the Printer to Be Used 42
ZipPrint (PC/3270 Only) 43
Preparing to Use ZipPrint 43
Starting ZipPrint 44

Chapter 8. Editing 45
Editing by Linking to Windows Application Programs 45
Confirming the DDE/EHLLAPI Settings 45
Using CopyLink and PasteLink 46
Copying Table Data to a Spreadsheet 46
Copying Marked Data without Dividing It into Cells 47
Copying Lines Containing Only Operational Signs 47
Copying Data in Cells As Text Data 48
Getting Help 48

Chapter 9. Transferring Files 49
Getting Help 51

Chapter 10. Setting Up a Session Window's Appearance 53
Showing or Hiding the Menu Bar and Tool bar 54
Getting Help 54

Chapter 11. Setting Up and Using the Assist Functions 55
Keyboard and Macro Functions 55
Macro Functions 55
Key Functions 55
Hotspots Setup 56
Using Hotspots 56
Keyboard Setup 57
Keyboard File 57
Pop-Up Keypad Setup 58
Pop-Up Keypad File 58
Using the Pop-Up Keypad 59
Mouse Setup 59
Mouse File 60
Macro Setup 60
Using a Macro 61
Creating a Macro 61
Setting Up a Macro 62

Chapter 12. AS/400 Utilities 63
Data Transfer (PC400 Only) 64
Shared Folders (PC400 Only) 65
Starting Shared Folders 66
Releasing Drives 66
Saving the Assigned Drive Settings 67
Shared Folders Considerations 67
Using PCS/400 Router API (PC400 Only) 69
Getting Help 69
Virtual Printers (PC400 Only) 70
Using a Virtual Printer 71
Virtual Printer Considerations 71

Chapter 13. PC400 Database Access 73
Before Using Database Access 73
Using the ODBC Driver 73
Using Database Access 74

Chapter 14. PC Organizer (PC400 Only) 75
Starting the PC Organizer 75
Getting Help 76

Chapter 15. Text Assist (PC400 Only) 77
Text Assist Key Functions 78

Chapter 16. Where To Find More Information 79
Online Help 79
How to Use Online Help 79
Messages 80
OIA Messages 80
OIA Indicators and Reminders 81
Personal Communications Library 85
Related Publications 85
Contacting IBM 86
Statement of Service 86
Other Ways to Contact IBM 89

Appendix A. Communication Adapters and Modems 91
Family-1 Communication Adapters 91
Family-2 Communication Adapters 92
Asynchronous Modems 93
Asynchronous Modems (Hayes AutoSync) 94
Synchronous Modems (SDLC) 94
PCMCIA Communication Adapters 94
Twinax Adapters 95

Appendix B. Personal Communications Directories and System File Modifications 97

Directories Created by the Installation Program 97
PRIVATE Subdirectory 97
SDK Subdirectory 98
PDFPDT Subdirectory 98
Modifying System Files 98
WIN.INI File 99
SYSTEM.INI File 99
PCSWIN.BAT File 102
PCSTSR.BAT File 103

Appendix C. Attachment Considerations 105
COAX Attachment 105
LAN via IEEE 802.2 Attachment 110
LAN via IPX/SPX (NetWare for SAA) Attachment 112
TCP/IP Connection 113
Windows NT SNA Client 115
SDLC Attachment 115
Advantis (IIN) Attachment 117
IBM Global Network Connection Attachment 118
Home3270 Attachment 119
APPC3270 Attachment 120
AnyNet Attachment 120
3270 Attachment via the AS/400 System 120
SNA Considerations 121
Twinaxial Attachment (Console) 123
Asynchronous Console 123

Appendix D. PC400 Setup Hints and Tips 125
Setting Up a 5250 Emulation PCMCIA Adapter 125
Installing an Enabler for the IBM 5250 Emulation PCMCIA Adapter 125
Enabling the 5250 PCMCIA Card 126
Memory Address Considerations 126
Twinax Card Configuration in PC400 127
Setting Up a Token-ring PCMCIA Adapter 128
Native Mode with DXMC0MOD.SYS to provide the IEEE 802.2 protocol . . . 128
Native Mode with DXMCSMOD.SYS to provide the IEEE 802.2 protocol . . . 129
NDIS Mode with DXME0MOD.SYS to provide the IEEE 802.2 protocol 130
NetWare for SAA Setup 130

Appendix E. AS/400 Configuration Examples 133
AS/400 Device Description 135
5250 Sessions through One Link 135
AS/400 System Mode Description 136
AS/400 Device Description for Twinaxial Attachments (APPC) Example 137
AS/400 Device Description for Asynchronous Attachments Example 140
AS/400 Device Description for Hayes AutoSync Attachments Example 144

Appendix F. System/3X Configuration 149

Appendix G. Using PC Support/400 Applications with PC400 151

Appendix H. Default Key Function Assignments 153
Default Key Functions for 3270 Sessions 153
Default Key Functions for 5250 Sessions 155
Extra Key Functions (3270 and 5250 Sessions) 157

Notices 159
Trademarks 160

Glossary 161

Index 165

About This Book

This book describes how to install, configure, and start Personal Communications. After you get Personal Communications up and running and begin to perform various tasks, use the online help whenever you need additional information. Refer to Chapter 16, “Where To Find More Information” on page 79 for information about online help, the Personal Communications library, and related publications.

This book is for users of both Personal Communications AS/400 V4.1 and Personal Communications AS/400 and 3270 V4.1.

The windows in this book are representative of ones that you might see while working with Personal Communications. Minor variations could occur between what you see on your display and what is in the book.

Text Conventions Used in This Book

This book uses the following text conventions:

UPPERCASE	Uppercase indicates commands, program keywords, and default values. You can enter these values in uppercase or lowercase.
Bold	Bold type indicates the names of window controls, such as lists, check boxes, entry fields, menu choices, and push buttons.
Italics	Italics indicate: Special emphasis in text or a reference citation. Variables that you supply a value for.
Example type	Example type indicates information that the user is instructed to type at a command prompt or in a window.

This book also uses *icons* (pictures) in the text to help you find different types of information.

This icon represents a note, important information that can affect the operation of Personal Communications or the completion of a task.

This icon represents a hint or additional information that can help you complete a task.

© Copyright IBM Corp. 1989, 1996

This icon represents information that applies to PC400 only.

This icon represents information that applies to PC/3270 only.

What's in this Package

The Personal Communications package contains the following things:

- Personal Communications AS/400 and 3270 for Windows** diskettes
- Personal Communications/3270 for Full-Function DOS diskettes
- Personal Communications/3270 for Entry-Level DOS diskettes
- Local Area Network (LAN) Support diskettes
- APPC Networking Services for Windows diskettes
- AnyNet SNA over TCP/IP for Windows diskettes
- CMMouse for DOS and Windows diskettes
- BookManager Library Reader for Windows
- *Personal Communications for Windows Up and Running*
- *Personal Communications for Full-Function DOS Up and Running*
- *Personal Communications for Entry-Level DOS Up and Running*
- *AnyNet Guide to SNA over TCP/IP for Windows*

Alternatively, the package might contain a CD-ROM, which includes all of these.

APPC Networking Services for Windows

This product supports advanced program-to-program communication (APPC) in the Microsoft Windows** environment. With Networking Services, applications on your workstation can communicate with partner applications. Networking Services supports both Common Programming Interface for Communications (CPI-C) and the APPC Communications Router application programming interface (API), which is also called the EHNAPPC API.

AnyNet SNA over TCP/IP for Windows

This product allows 3270 and 5250 display and printer sessions, running in workstations attached to TCP/IP LANs, to communicate with S/390 or AS/400 systems that are attached to SNA networks. 3270 sessions must connect through an IBM Communications Server gateway, configured for SNA over TCP/IP; 5250 sessions can connect directly with an AS/400 that is configured for AnyNet.

Chapter 1. Welcome to Personal Communications for Windows

Personal Communications is available in two packages:

Personal Communications AS/400 for Windows V4.1, which provides 5250 emulation and connections to AS/400 and S/3*X* systems. This package is referred to as PC400.

Personal Communications AS/400 and 3270 for Windows V4.1, which provides 3270 and 5250 emulation and connections to S/390, AS/400, and S/3*X* systems. The components of this combined package are referred to as PC400 and PC/3270.

The information in this book applies to both packages, except where indicated otherwise.

Personal Communications for Windows emulates 3270 and 5250 terminals and runs on Microsoft Windows 3.1 Enhanced mode and Windows for Workgroup 3.11. It has an easy-to-use graphical interface allowing drag- and-drop and includes many useful features, such as file transfer, and dynamic configuration all in the Windows environment. PC400 also provides support for Shared Folders, Data Transfer, Virtual Printers and Open Data Connectivity (ODBC).

Personal Communications is a full-function Windows emulator package and supports a variety of connection types, such as Token-Ring, Ethernet, TCP/IP, Advanced Program-to-Program Communication (APPC), and asynchronous, including Hayes** AutoSync support and wireless communications.

© Copyright IBM Corp. 1989, 1996

Personal Communications Program Window

When you install Personal Communications, the main functions that you can use are displayed as icons. The following example shows the icons for the combined package.

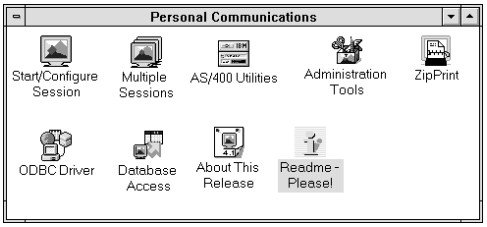

A simple explanation of each function follows:

Start/Configure Session

Use this icon to set up the link configuration, as well as other attachment information. You need this information to establish communication with the host system. After you configure the link, you can save the configuration to a workstation profile (***.WS**) and create an icon for that session. Later, you can click the new icon to start the session, using your saved configuration.

Multiple Sessions

Use this icon to create batch files (*.BCH), which specify multiple host sessions (workstation profiles) or other Windows programs that you want to start concurrently. Again, you can create an icon for each batch file and start the programs just by clicking the icon.

Administration Tools

Use this icon to open a folder that includes:

Menu Bar Customization Utility
Configuration and Program Options
Maintenance Aid
Trace Capture Program
Adapter Status Report
Trace Setup Utility

ZipPrint (PC3270 only)

Use this icon to start the ZipPrint program, a Personal Communications sample utility that allows you to print host system files or screens. It adds an item to the menu bar of the session window.

Note

By default, PROFS-oriented functions of ZipPrint are restricted to U.S. English PROFS. You can customize it for other languages.

AS/400 Utilities

Use this icon to open a window that includes:

Data Transfer
Shared Folders
PCS/400 Router API
Virtual Printers

ODBC Driver

Use this icon to open a window where you can add, delete, or configure data sources, or install new open database connectivity (ODBC) drivers.

Database Access

Use this icon to start the Database Access utility that lets you retrieve data from a database, such as an SQL server Microsoft Excel, Lotus 1-2-3, or dBASE database, that complies with Microsoft ODBC standards(Level 1) . You can then pass the retrieved data to Excel and Lotus 1-2-3 directly.

About This Release

This lists the functions that are added or changed in this release of Personal Communications.

Readme - Please!

This includes important information that became available too late to be included in this book or that might be of special interest.

Personal Communications Sessions

The sessions that Personal Communications provides are logical connections enabling communication between your workstation and host system. The following types of sessions are available:

Display session
Use your workstation as a display terminal connected to the host system.

Printer session
Use your workstation printer as a host system printer.

Router session (PC400 only)
In V4.0, a router session provided the connection path between the AS/400 host and the workstation for functions such as Data Transfer and Shared Folders applications. In V4.1, you no longer need to explicitly define router sessions.

Personal Communications Connections

Personal Communications supports a variety of connections for the following three host systems:

System/390 Connections

Interface	Attachment
LAN	LAN via IEEE 802.2 LAN via 3270 Emulation Gateway LAN via NetWare for System Application Architecture Telnet3270 Windows NT – SNA Client AnyNet LAN via AS/400 APPC3270 via LAN
COAX	SNA Distributed Function Terminal Non-SNA Distributed Function Terminal Control Unit Terminal (CUT) 3174 Peer Communication
COM port	Hayes AutoSync SNA-over-Async IBM Global Network Connection Home3270 Advantis (IIN)
SDLC	Synchronous Data Link Control SDLC via AS/400 (passthru) APPC3270 via SDLC
5250	TDLC via AS/400 (passthru)

AS/400 Connections

Interface	Attachment
LAN	LAN via IEEE 802.2 PC Support/400 Router Telnet5250 AnyNet
SDLC	Synchronous Data Link Control PC Support/400 Router
5250	Twinaxial Data Link Control (APPC) Twinaxial Data Link Control (Console) PC Support/400 Router
COM port	Hayes AutoSync SNA-over-ASYNC SNA-over-ASYNC V4.0 SNA-over-ASYNC (Console)

System/3X Connection

Interface	Attachment
5250	Twinaxial Data Link Control

Supported PC400 Functions

The following PC400 functions are supported by attachment type, as follows:

Adapter Card	Attachment	PC400 Functions					
		5250 Display	5250 Printer		Data Transfer	Virtual Printers	ODBC
LAN	IEEE 802.2	X	X	X	X	X	X
	PCS Router	X	X	–	X	–	–
	Telnet 5250	X	–	–	–	–	–
	AnyNet	X	X	X	X	X	X
SDLC	SDLC	X	X	X	X	X	X
	PCS Router	X	X	–	X	–	–
5250	TDLC (APPC)	X	X	X	X	X	X
	TDLC (CUT/Console)	X	–	–	–	–	–
	PCS Router	X	X	–	X	–	–
COM port	SNA-A	X	X	–	X	–	–
	SNA-A V4.0	X	X	X	X	–	–
	SNA-A (Console)	X	–	–	–	–	–
	Hayes AutoSync	X	X	X	X	X	–

X indicates which functions are supported.
– indicates which functions are not supported or not applicable.

Note

The SNA-over-Async (SNA-A) attachment uses communication functions provided by Windows (IBMVDC.386). The SNA-A V4.0 attachment, however, requires a terminate and stay resident (TSR) program. The performance of SNA-A is better than that of SNA-A V4.0.

What's New in Personal Communications V4.1

Personal Communications Version 4.1 contains many enhancements. Following is a list of what has been added since Version 4.0 and a short description of each new function.

Installation and Configuration Enhancements

– **Automatic Dialing**

The following improvements have been made to host connectivities that require a dial operation.

- Improved performance
- Improved automatic-dialing customization
- Setup for quick dial and dial without disconnecting
- Idle time out
- Support for V42bis modem with data compression
- Setup for dial mode, speaker volume, modem operational mode, and automatic-answer mode
- Use of the Advantis telephone table for IBM Global Network Connection connections
- Display of the telephone title with the telephone number
- Easy selection of a backup telephone number
- Additional modem support[1]

– **Installation**

Installation has the following enhancements.

- Selective installation to minimize hard disk space requirements
- Ability to uninstall Personal Communications from your workstation

– **Router Sessions**

You no longer have to configure a router session to support Shared Folders or Data Transfer. If you have an active display or printer session, either or both of these functions will use that session to connect to an AS/400 system.

1 See Modems supported on page Appendix A, "Communication Adapters and Modems" on page 91.

– ***Keyboard Customization***

  Personal Communications now displays improved graphics for non-US English keyboards when you customize your keyboard.

  Personal Communications now supports the Microsoft Natural Keyboard.

–

AS/400 Utilities (PC400 only)

  An AS/400 Utilities program group is created when you install PC400 to provide access to the following utilities:

  - Data Transfer Utility
  - Shared Folders
  - PCS/400 Router API
  - Virtual Printers

Communication Enhancements

– **APPC Communications**

  You can now establish APPC communication links using your workstation profile. You are no longer need to explicitly configure router sessions for the Data Transfer and Shared Folders utilities.

– **AnyNet Connection**

  The AnyNet family of products enables programs to communicate across interconnected networks of different kinds; because of this, you can often reduce the number of networks and thus make their management less complex. It is usually not necessary to alter your existing programs or hardware. For example, you can run Personal Communications 3270 or 5250 sessions in a workstation attached to a LAN that runs only TCP/IP and connect to a host that is on an SNA network. You can also run APPC applications across a TCP/IP network.

  Note: Personal Communications does not support concurrent operation of 3270 and 5250 sessions.

– **ASYNC Performance**

  The Home3270, Advantis (IIN), IBM Global Network Connection, and SNA-over-Async attachments (except for SNA-over-Async (V4.0)) now use the IBMVCD.386 virtual communication driver instead of a TSR program. This provides much better performance and allows higher line speeds.

– ***Windows NT V3.5 Support***

  Personal Communications runs in Windows as a 16-bit Windows application in the Windows NT-V3.5 environment and supports the following connections:

  - Telnet 3270
  - Telnet 5250
  - Windows-NT client (using the FMI interface)

What's New

–

APPC 3270 Support (PC/3270 only)

The APPC 3270 attachment has been added to PC/3270 configuration to allow migration to APPC and Advanced Peer-to-Peer Networking (APPN) networks from LU2. APPN networks are more flexible in their layout and easier to maintain than traditional SNA networks.

The OIA indicator, COMM 646, indicates the the conversation to the APPC 3270 server is not allocated.

–

IBM Global Network Connection (PC/3270 only)

Support for the IBM Global Network Connection enables high performance in 3270 sessions, using the IBM Global Network.

–

ISDN Attachment Support by WaveRunner (PC/3270 only)

Personal Communications using the IEEE 802.2 LAN protocol can use the WaveRunner to access the Integrated-Services Digital Network (ISDN) in the following ways.

- Direct access to ISDN using WaveRunner network driver interface specification (NDIS**) and WaveRunner dialer
- Access to ISDN over LAN Distance using the WaveRunner Async-HDLC driver

–

Telnet 3270 (PC/3270 only)

The following improvements have been made to Telnet 3270.

- Printer session support (via RFC1646 or RFC1647)
- SSCP-LU session support(via RFC 1647)

– **System/3X Support** (PC400 only)

  System/3X support allows your workstation to connect to a System/36 or System/38 as if it were a 5250 display or printer.

Emulation Enhancements

– **Confirmation When Closing Personal Communications**

  You can choose to have a confirmation box appear when you close Personal Communications to verify that you really want to close the session window.

– **OEM Twinax Adapter Support**

  The virtual device driver (VxD) for IBM twinax adapters has been redesigned to support adapters from IBM and other equipment manufacturers (OEMs). The OEM must provide a VxD that communicates with the IBM VxD; several OEMs have written such drivers. If you want to use an OEM twinax adapter, refer to the list of supported twinax adapters in the README. If the adapter you want to use is not in the list, ask IBM if it is supported.

– **PCSMON Trace Setup**

  PCSMON trace setup allows you to turn trace functions on and off by making selections in a window. You do not need to know the communication link, nor do you need to edit a workstation profile.

– **Tool bar Customization**

  You can add or remove buttons from the default tool bar. In addition, when you place the cursor over a tool bar button, a short description of the button's function appears.

– **Printer Form Feed Options** (PC/3270 only)

  The following improvements have been made to printer form feed.

  - "Ignore FF when at first print position..." for LU 1 jobs. This was previously available only on LU 2, LU 3, and non-SNA sessions.
  - Provide consistency for the FF option between printer definition table (PDT) and non-PDT modes.

What's New

– **Response Time Monitor** (PC/3270 only)

The response time monitor (RTM) allows the network manager to differentiate between fast, slow, or questionable response times. RTM accurately measures and records transaction times from display stations that communicate with the host. You can only use the RTM when you have a LAN via IEEE802.2 attachment.

– **AS/400 ODBC Support** (PC400 only)

The AS/400 open database connectivity (ODBC) (Level 2) driver provides a standard interface to the AS/400 database (DB2/400) for Windows applications.

– **Column Separator** (PC400 only)

This enhancement lets you choose the shape of a column separator. Select a column separator in the shape of a dot or vertical bar in Display Setup.

– **Database Access Tool** (PC400 only)

The database access tool is a graphical query utility that provides a dynamic view of a database.

–

Data Transfer (PC400 only)

You can now use data transfer from a graphical interface to perform the following tasks:

- Establish communication links with host systems

  APPC communication links use the workstation profiles and do not require a seperately-defined router session

- View, change, and run data transfer request files.

  You can drag and drop, or transfer a request file or list into the request list or onto a push button.

Data transfer also uses batch mode to create and then send requests in the list.

–

Virtual Printers (PC400 only)

The Virtual Printers function lets you use a printer attached to an AS/400 system as though it were directly connected to your workstation. The Virtual Printers window lets you assign local ports to one or more printers attached to AS/400 systems and indicates connection status, the system name, printer device name, and the output queue name.

To use this function, your AS/400 system must have one of the following transaction programs installed:

- Virtual Printer, which is provided with:

  OS/400 V3R1 or later
  OS/400 V2R2 or V2R3 and PC Support/400

- Network Print Server, which is provided with OS/400 V3R1 or later

Chapter 2. Getting Ready to Install Personal Communications

Personal Communications supports a wide range of workstations that use different bus architectures and peripheral components. There are hardware and software requirements, as well as memory and storage requirements, to consider when planning the installation of Personal Communications.

The following sections describe these requirements for installing Personal Communications and list support for monitors, adapters, and keyboards.

Workstation Hardware

Personal Communications supports workstations with the following hardware:

Table 1. Workstation Hardware Requirements

System unit	The recommended system unit has an Intel** 80386 or higher microprocessor and at least one 1.44 MB 3.5-inch diskette drive.
Display Monitor	Personal Communications supports all display monitors supported by Windows.
Video Adapter	IBM PS/2 Display Adapter (VGA) IBM PS/2 Display Adapter 8514/A IBM PS/2 XGA Display Adapter/A PS/2 XGA II Display Adapter/A IBM Image Adapter/A IBM Image Adapter/A 3 MB 6091 ATI** Technologies Mach 32 (68000) Cirrus Logic** GD5426 S3** Corp. S3 86C805 Tseng Laboratories ET4000/W32
Keyboard	Enhanced keyboard (101-key) Space-saving keyboard Host-connected keyboard (122-key) Microsoft Natural Keyboard
Supported Printers	All printers supported by MS Windows are supported when a PDT file is not used. For more details about printers supported in PDT mode, refer to the *Personal Communications Reference for Windows*.
Communication adapters	Personal Communications supports the communication adapters listed in Appendix A.
Modems	Personal Communications supports the modems listed in Appendix A.

© Copyright IBM Corp. 1989, 1996

Workstation Hard Disk Requirements

You need at least 6 MB of disk space to install Personal Communications.

Workstation Memory Requirements

Personal Communications runs in 386 Enhanced mode of Windows. The amount of memory you need depends on several factors, including the attachment type, number of sessions, and the use of programming interfaces such as Emulator High-Level Language Application Programming Interface (EHLLAPI) and Dynamic Data Exchange (DDE). In general, at least 4 MB of memory is recommended.

If you want to run Personal Communications and other Windows or non-Windows applications simultaneously and the other applications have high memory requirements, you might need to add more memory to your workstation.

Workstation Software

Personal Communications for Windows requires that your workstation have one of the following DOS programs installed:

IBM DOS Version 5 or later
MS-DOS Version 3.31 or later
Novell DOS Version 7 or later

Personal Communications for Windows requires that your workstation have one of the following Windows programs installed:

Microsoft Windows 3.1 or later
Microsoft Windows for Workgroup Version 3.11 or later

Depending on your system configuration, your workstation also might need one or more of the following programs:

IBM Local Area Network (LAN) Support Program Version 1.21, or later (LAN Support Program Version 1.33 or later is required for PCMCIA adapters)

Novell NetWare for SAA Version 1.3 or later

IBM TCP/IP Version 2.1 for DOS

FTP Software, Inc., PC/TCP Network Software for DOS Version 2.3

NetManage, Inc., Chameleon NEWT TCP/IP for Windows Version 3.1

Novell, Inc., LAN WorkPlace for DOS Version 4.1

Trumpet Software International Pty. Ltd., Trumpet Winsock 2.1.

Host Requirements

Refer to the *Personal Communications Reference for Windows* for information about software and hardware requirements for host systems.

Chapter 3. Installing Personal Communications

This chapter describes how to install Personal Communications from diskettes or from a network server. It also describes how to install the program files in a directory on a server so that they can be shared.

Installation

You can install Personal Communications from diskette or from the network. You can also install Personal Communications from CD-ROM. Refer to the CD-ROM manual for more information.

If you have questions during installation, refer to the online help for additional information.

Diskette Installation

To install Personal Communications from diskette:

1. Insert *Personal Communications Diskette 1 (Installation)* into drive **A**.
2. Select **Run** from the File menu in the Windows Program Manager.
3. In the Run window, type A:\INSTALL and then select **OK** where A is the name of your diskette drive.

   The Personal Communications logo appears followed by the Personal Communications window.
4. Type your **Name** and **Company** and then select **OK**.
5. In the window that appears, confirm your name and company and then select **OK**.
6. When the Emulation Selection window appears, select an emulation session choice.

© Copyright IBM Corp. 1989, 1996

Installing Personal Communications

7 Type the drive and directory where you want to install Personal Communications, or accept the default drive and directory, ***bootdrive*:\PCOMWIN**. If you have a previous version of Personal Communications on your workstation, the drive and path for that version appear in the window.

Private files such as profile, batch, macro, and keyboard-definition files are created in the **PRIVATE** subdirectory of the directory you specify here. (An example of a user private file is a profile that is created when you save your workstation configuration.)

The Personal Communications Installation Options window appears and shows the amount of disk space required for each selection.

8 Select the installation option of your choice and then select **OK**.

If you select **Partial Installation**, the Select Components window appears. The amount of disk space required for each option and the amount available on the destination disk displays.

9 Select the components you want to install from the list and then select **OK**.

Note

You can add or remove components after installation by using the Configuration and Program Options utility in the Administrator Tools folder.

10 If a previous version of Personal Communications is installed on your workstation, decide whether to overwrite it. Select **OK** to overwrite the previous version and continue installation.

For more information about migration, refer to “Migrating from a Previous Version” on page 24.

A message appears that your system files have been backed up.

11 Follow the instructions that appear on the screen and insert the remaining program diskettes.

12 Accept “Personal Communications” as the name of the program group, or type another name. You can also select one that already exists.

To add an icon to a program group other than Personal Communications, complete these steps:

a. Select **Browse**.
b. When the window appears, select the desired program group from the list and then select **OK**.

13 When confirmation messages appear, select **OK** to continue.

This completes the installation of Personal Communications.

14 If you want to use Personal Communications immediately, select **Restart Windows**; otherwise, select **Continue**.

Network Installation

If you want to install Personal Communications from a network server, place the Personal Communications files on the network server first.

If Personal Communications is installed on a network server, workstations connected to the server can share the program files; there is no need to install them on the workstations. When you install or customize Personal Communications from a server, your workstation (session) profiles and other private files are stored on your workstation (or in your private directory on the server) in a subdirectory named **PRIVATE**. When you start Personal Communications, the program files are loaded from the server, but your own files are used to define your host sessions.

Installing on or from a Network Server

To install Personal Communications files on a server, enter:

```
INSTALL /A
```

To install Personal Communications files from a server and to keep only the private files either on your workstation or on your "home" directory on the server, enter:

```
INSTALL /N
```

Installing Personal Communications on a Network Server

Use the system administrator option (**/A**) to install Personal Communications files on a server. The installation program copies the product files to the server but does not create a program group.

Installing Personal Communications

To install Personal Communications on a network server, complete these steps:

1. Select **Run** from the File menu in the Windows Program Manager.
2. Enter A:\INSTALL /A and follow the prompts.

   The program files are unpacked and copied to the server drive that you specify.
3. Select **Help** from the Drive and Directory window for an explanation of the installation process, the icons, and session configuration.

Installing Personal Communications from a Network Server

To install Personal Communications from a server, use the network option (**/N**). Your personal files will be copied to the PRIVATE subdirectory of the directory that you specify. The program files will not be copied.

1. Select **Run** from the File menu in the Windows Program Manager.
2. In the Run window, type *netdrive\path*\INSTALL /N and then select **OK**.

   The *netdrive\path* is the server drive and directory where the Personal Communications program files are stored.

   Note

   If you do not specify the /N option, a message prompts you to choose whether you want to use the program files on the server. You should select **Yes**; otherwise, if you select **No**, all the program files are copied to your workstation.
3. Type the drive and directory where you want to install your private files, or accept the default drive and directory, C:\PCOMWIN.

   Tip

   You might want to install your private files in your personal directory on the server.

   The files are installed in the PRIVATE subdirectory of the path you specify. For example, if you accept the default, they are installed in C:\PCOMWIN\PRIVATE.

Note

Select **Help** from the Drive and Directory window, to view an explanation of the installation process, the icons, and session configuration.

4 When prompted, enter the name of the program group to which you want to add the Personal Communications icons; the default is Personal Communications. You can create a new group or add the icons to an existing one.

You will see some confirmation messages and a completion message.

Finally, you will be prompted to restart Windows because some of the Windows settings have been changed. You might be asked to restart your workstation.

Installing with Preconfigured Profiles or Batch Files

Your system administrator might give you preconfigured profiles or batch files so that you can use standard configurations; you can install these configuration files and the program files simultaneously.

1 Insert **PC/3270 Diskette 1** into drive A (unless you are installing from a server).

2 Click **Run** from the Program Manager **File** menu.

3 In the *Run* window, add the names of the preconfigured files to the Install command; for example:

```
A:\INSTALL.EXE B:\COAX1.WS B:\SLAN1.WS B:\BATCH1.BCH
```

When the installation program installs the program files, it creates icons for these profiles and batch files.

4 In the next window, select the drive and directory in which you want to install PC/3270.

The program files will be installed in this directory (unless you are installing from a server); your private files will be stored in the PRIVATE subdirectory of this directory.

Migrating from a Previous Version

If you chose to overwrite a previous version of Personal Communications, you will see a window that asks whether you want the private files from the previous version to be migrated to the format for the new version. If you select **Yes**, you are asked if you want to save the old files and, if you do, to name the directory in which they are to be saved.

All the private files from the previous version will, if necessary, be updated to work with the new version of Personal Communications. If you are upgrading from Version 2, the .CFG files will be converted into workstation profiles, batch files, keyboard definition files, and so on.

Removing Personal Communications

You can remove the Personal Communications product files. To do this, select **Run** from the File menu and then enter the following command in the Run window:

INSTALL /D /T:*c:\PCOMWIN*

where:

/D Removes all Personal Communications product files, directories, and removes entries from SYSTEM.INI and WIN.INI, the program group and icons from the target drive and directory you specified.

/T Removes the Personal Communications files in the specified drive and directory. If you do not specify this parameter, the Personal Communications drive and directory listed in WIN.INI is removed.

c:\PCOMWIN
Is the drive and path that you want to remove Personal Communications from.

After you remove Personal Communications, PCSREMOV.EXE is left in your Windows directory.

Chapter 4. Configuring a Session

To communicate with a host system or application program successfully, configure a link configuration that is compatible with your workstation environment and other attachment information.

Personal Communications saves this configuration information to a workstation profile (***.WS**). This profile can be used later by other Personal Communications sessions, or to restart this session.

You can have an icon created for each workstation profile. Then you can double-click the session icon to establish communication with the host system using the saved workstation profile.

Configuring PC400

To connect PC400 to an AS/400 system, specific configuration information in the workstation profile must correspond to the information specified at the AS/400 system. Refer to Appendix E, “AS/400 Configuration Examples” on page 133 for more information about creating display, line, and controller descriptions on the AS/400 system.

Creating a Configuration

To configure a session:

1. Double-click on the **Start/Configure Session** icon in the Personal Communications folder.

   The logo panel appears. If there is a 3270 Coax adapter in your workstation, a message appears to tell you that your workstation will be connected automatically; if there is not, the message tells you that you must configure a connection.

2. Select **OK** to continue.

   If you have a coax adapter, and if you have a connection to a host system, you will now see an active session screen; if you want to configure another

© Copyright IBM Corp. 1989, 1996

attachment type, select **Configure** from the Communication menu. If you do not have a coax adapter, the Customize Communication window appears.

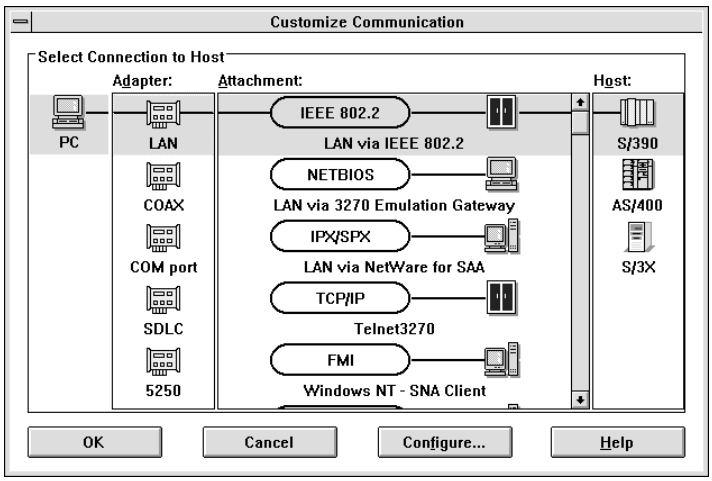

If more than one type of host is shown, click on:

S/390 for connections to an S/390 system
AS/400 for connections to an AS/400 system
S/3X for connections to a System/36 or System/38

3 Click on the adapter card interface that you will use; the attachment types that can be used with this adapter appear.

4 Click on the attachment type to be used.

5 Select **Configure**.

The Customize Communication - xxxxx window appears. (where *xxxxx* represents the attachment type you selected in step 3.)

Make your selections for the parameters in this window. For parameter details, refer to the online help.

6 Select **Configure Link**.

Enter the required information, or select values for the session parameters. For details of these parameters, refer to the online help.

7 When you have finished, select **OK** on each window until you return to the session window.

8 Select **Yes** to use the new configuration immediately or to save it. If you select **No**, the configuration information you set is lost. For more details about saving configuration information, see “Saving Configuration Information” on page 27.

Saving Configuration Information

This section describes how to save created configuration information in a workstation profile (*.WS).

By saving configuration information, you can use it to restart your the workstation with the saved configuration information. If an icon is added to the Personal Communications program group, you can restart the workstation with the saved configuration information by double-clicking on this icon

To save configuration information in a workstation profile:

1 Select **Save** or **Save As** from the File menu. When you save the existing workstation profile with **Save**, the configuration is complete. You need not do the following steps.

Otherwise, the Save WorkStation Profile As window appears.

2 Enter a file name (***.WS**). The name you enter will become the icon's title if you did not enter a description. The title appears in lowercase and is restricted to 8 characters.

Tip

If you want a longer or more descriptive title, enter the text you want in the **Description** field. The description becomes the icon title.

A message appears that lets you choose to have an icon created.

3 If you select **Yes**, a session icon is created in the program group you specify and you can start the workstation profile by double-clicking on this icon.

If you select **No**, you can run the session window program (**PCSWS.EXE**) with the workstation profile name (***.WS**) by selecting **Run** from the File menu.

C:\PCOMWIN\PCSWS.EXE C:\PCOMWIN\PRIVATE*xxx*.WS

where *xxx*.WS is the workstation profile name.

Note that you must specify all paths and directories.

The configuration information is saved.

Changing Configuration Information

To change a profile:

1 Double-click on the icon corresponding to the profile to be changed.

The session window appears.

2 Select **Configure** from the Communication menu.

The subsequent steps are the same as for setting up a new configuration. Refer to "Creating a Configuration" on page 25 and change the configuration information as required.

3 After you make all necessary changes, select **OK** in the Customize Communication window.

If you change the settings for items other than the adapters or attachment types, go to step 4.

If you change options that require changes to Windows SYSTEM.INI file to load additional communication drivers or DOS mode API drivers, go to step 5 to continue.

4 The following message appears:

> Because you have changed the configuration,
> communication will be terminated if you
> proceed. Are you sure?

If you select **OK**, communication ends, but then you are reconnected with a new workstation profile. Go to step 7 on page 29 to continue.

5 The following message appears:

> Do you want to change the System Setup now?

If you select **Yes**, Personal Communications updates Windows SYSTEM.INI file and a message appears; you must restart Windows before you can communicate. If you select **restart Windows**, go to step 6. If you select **continue**, go to step 7 on page 29.

If you select **No**, you must manually change the system settings with the Configuration and Program Options utility in the Administrator Tools folder before you can use this configuration. (Refer to *Personal Communications Reference for Windows* for more information.) Go to step 7 on page 29 to continue.

6 The following message appears:

> Do you want to save the current settings?

If you select **Yes**, the Save Workstation Profile As window appears. Type a name for the profile and then select **OK**.

The profile is stored in the **PRIVATE** subdirectory and then Windows restarts.

Changing the configuration information is completed. You do not have to do the following step.

7 The changes are saved to the workstation profile.

a. Select **Save** or **Save As** from the File menu. When you select **Save As**, the Save Workstation Profile As window appears.
b. Specify each item and then select **OK**.

Tip

Unless you have unchecked **Save on Exit** from the File menu, changes are saved to the workstation profile automatically whenever you exit this session.

Chapter 5. Using Sessions

This chapter describes how to start and stop single and multiple sessions.

If your configuration information was saved, as described in “Saving Configuration Information” on page 27, it is stored in a workstation profile (***.WS**). If you have a session icon, you can double-click it to start a session, using the saved configuration information.

Note

If you are a first-time user of Personal Communications, or there are no session icons in your Personal Communications group, refer to Chapter 4 , to create a configuration.

Starting Sessions

You can use the following methods to start sessions:

Select an already-configured session icon.

Start from an existing session window

Specify a workstation profile name in the Run window of the Program Manager. For example:

C:\PCOMWIN\PCSWS.EXE C:\PCOMWIN\PRIVATE*MY*.WS

Start multiple sessions with a batch file

When you start multiple sessions, the titles of session windows are Session A, Session B, and so on, unless you’ve customized them.

© Copyright IBM Corp. 1989, 1996

Starting by Selecting the Session Icon

To start a session, double-click the **Session** icon. (This icon has the same name as the workstation profile if you did not specify a name for it.)

The session starts.

Starting from a Session Window

Use the following methods to start from an existing session window:

Start another session using the same workstation profile
Start another session using another workstation profile
Start a different type of session using the same session window

Starting Another Session Using the Same Profile:

Select **Run the Same** from the File menu. Another session starts, using the same profile.

Starting Another Session Using a Different Profile

1. Select **Run Other** from the File menu.

   The Open Other Workstation Profile window appears.

2. Double-click the desired workstation profile in the **File Name** list.

3. Select **OK**.

   Another session starts, using the profile specified in step 2.

Starting a Different Type of Session from a Session Window

1. Select **Open** from the File menu.

2. Specify the desired workstation profile and then select **OK**.

   The current session ends and then another session starts, using the selected profile.

Starting a Workstation Profile from the Program Manager

To start the session:

1. Select **Run** from the File menu in the Program Manager.
2. Type the following command in the **Command Line** field and then select **OK**.

   C:\PCOMWIN\PCSWS.EXE C:\PCOMWIN\PRIVATE*MY.WS*

   where *MY.WS* is the workstation profile stored in the C:\PCOMWIN\PRIVATE directory.

The session starts, using the specified workstation profile.

Starting Multiple Sessions

You can use the batch program, which runs batch files (*.BCH), to start two or more workstation profiles at the same time. Personal Communications batch files can also start other programs when you include their startup commands. This is especially useful if you always want to start an application when you start a session. For example, you might want to start an application, such as ZipPrint, that uses a Personal Communications API.

If you created an icon for your batch file, you can start workstation profiles and other programs in the batch file just by double-clicking the icon.

Creating a Batch File

To create a batch file:

1 Double-click the **Multiple Sessions** icon.

The Create/Modify Batch File window appears.

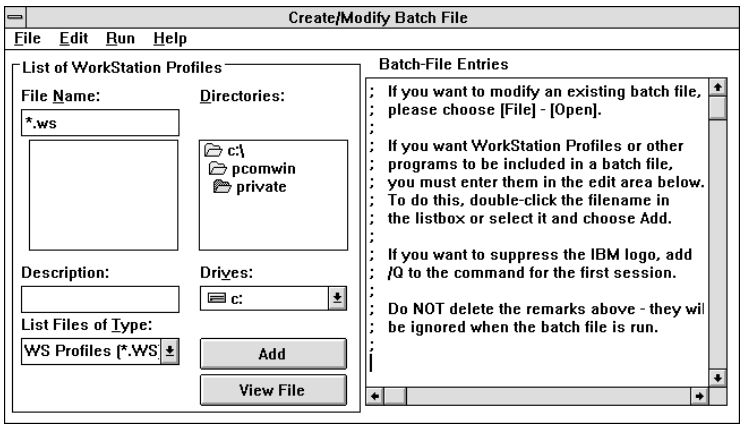

2 There are four methods for including profiles or programs in a batch file. Use the method you prefer:

Double-click the file names in the **File Name** list box.

Drag and drop the file names with the right mouse button from the **File Name** box to **Batch-File Entries**.

Select a file name from the **File Name** list box and then select **Add**.

Type the complete path and command file name in the edit area.

Personal Communications places the full path and command that is needed to run the workstation profile or other program above the cursor line in the edit area. If there is no cursor, the command will be added to the last line.

To see the contents of the profile you added to the batch file, click it in the **File Name** list box and then click **View File** or the magnifying glass.

Note

Some brief instructions appear at the top of **Batch-File Entries**; you need not remove them because they do not affect the running of the batch file.

3 Repeat step 2 for each subsequent file to be added.

PCSWS.EXE Options

To suppress the IBM logo when you start one or more sessions, add the parameter **/Q** to the first command in the batch file:

C:\PCOMWIN\PCSWS.EXE C:\PCOMWIN\PRIVATE\TCPIP1.WS **/Q**

To start a session as an icon, not as a window, add the parameter **/I** to the command in the batch file:

C:\PCOMWIN\PCSWS.EXE C:\PCOMWIN\PRIVATE\TWINAX.WS **/I**

4 When you complete the edit, save the created batch file by selecting **Save** from the File menu.

The Save Batch File As window appears.

5 Enter a name for the batch file (***.BCH**).

The name you enter is used as the icon title, unless you enter a description as well.

Note

When the file name is used for the icon title, it appears in uppercase and is restricted to 8 characters.

6 Select **OK** to continue.

7 Select **Yes** if you want to create an icon for the batch file.

The Personal Communications window appears.

8 Specify the program group to which the batch file icon is to be added and then select **OK**.

A message appears, asking you to save the batch file.

9 Select **OK**.

The batch file icon appears in the specified program group.

The following two examples are of batch files that sequentially run four workstation profiles, saved in the C:\PCOMWIN\PRIVATE directory, and then run **MYAPP.EXE**.

Sample PC/3270 Batch File

```
C:\PCOMWIN\PCSWS.EXE C:\PCOMWIN\PRIVATE\COAX1.WS /Q
C:\PCOMWIN\PCSWS.EXE C:\PCOMWIN\PRIVATE\COAX2.WS /I
C:\PCOMWIN\PCSWS.EXE C:\PCOMWIN\PRIVATE\SLAN1.WS
C:\PCOMWIN\PCSWS.EXE C:\PCOMWIN\PRIVATE\SLAN2.WS
C:\APPL\MYAPP.EXE
```

Sample PC400 Batch File

```
C:\PCOMWIN\PCSWS.EXE C:\PCOMWIN\PRIVATE\AS4X1.WS /Q
C:\PCOMWIN\PCSWS.EXE C:\PCOMWIN\PRIVATE\AS4X1.WS /I
C:\PCOMWIN\PCSWS.EXE C:\PCOMWIN\PRIVATE\AS4Y1.WS
C:\PCOMWIN\PCSWS.EXE C:\PCOMWIN\PRIVATE\AS4Y1.WS
C:\APPL\MYAPP.EXE
```

Using a Batch File

You can use one of the following methods to run a batch file:

Double-click a batch file icon.

Run the batch file from a DOS prompt:

```
[drive]:\[path]\PCSBAT.EXE  [drive]:\[path]\xxxx.BCH  /R
```

or

```
[drive]:\[path]\PCSBAT31.EXE  [drive]:\[path]\xxxx.BCH  /R
```

Note: To run a batch file, specify the /**R** option.

Double-click the **Multiple Sessions** icon.

1. Select **Open** from the File menu in the Create/Modify Batch File window.
2. Select the desired batch file and then select **OK**.

   The contents of the batch file appears in the edit area.
3. Select **Run** from the Run menu.

Editing an Existing Batch File

To edit an existing batch file:

1. Double-click the **Multiple Sessions** icon.

   The Create/Modify Batch File window appears.

2. Select **Open** from the File menu.

   The Open Batch File window appears.

3. Select the batch file you want to edit and then select **OK**.

   The contents of the batch file you selected appear in the edit area of the Create/Modify Batch File window.

4. Edit the batch file. Refer to step 2 on page 34 for more details.

   Refer to the online help for details about the menu bar Edit functions. Select **Index** from the Help menu and then select **Menu-Bar Commands of the Batch-Program Window**.

5. When you complete the edit, save your changes by selecting **Save** or **Save As** from the File menu.

   Select **Save** to save your changes in the existing file.
   Select **Save As** to save your changes in a new file and then continue with step 5 on page 35.

6. Exit the Create/Modify window.

Starting Multiple Sessions without a Batch File

To start multiple sessions without a batch file:

1. Double-click the icon for the session you want to start first.

2. After it connects to the host, select one of the following choices from the File menu:

   Run the Same... to start another session with the same configuration.

   Run Other... to start a session with a different configuration.

   When the Open Other Workstation window appears, select the profile you want to start and then select **OK**.

Automatically Starting Sessions

To start one or more sessions automatically when Windows starts:

1. Open the Windows Startup group.
2. Drag the session icon or the batch icon to the Startup group.

Stopping Sessions

To stop a session, double-click the upper left corner of the session window, or select **Exit** from the File menu.

To stop multiple sessions at the same time, select **Exit All** from the File menu. All sessions end, and the associated session windows are closed.

Before Stopping a Session

If you perform this operation while a host application program is running, your session stops and you lose your connection to the program. Therefore, make sure you exit any host application programs–the system sign-on panel should appear in the session window–before you exit the session.

By default, your current configuration information is saved when you exit the session.

Chapter 6. Managing Sessions

Personal Communications provides the following functions, in addition to those provided by Windows, for those who work with several open session windows simultaneously. These functions allow you to manage your session windows easily and quickly.

Jump

Use **Jump** to switch between the currently opened session windows.

You cannot use Jump to switch to a session window that is currently hidden. Instead, select **Show** from the Window menu to display the session window on the screen. Then, select **Jump**.

Hide

Use **Hide** to stop displaying a visible session window.

You cannot hide all sessions. At least one session is always shown.

Show

Use **Show** to display a session window that was previously hidden with **Hide**.

View

Use **View** to display a previously-saved arrangement of windows, or to save an arrangement of windows.

Personal Communications can save and restore the following information relating to the session window view:

Position and size of each window
Window status (standard, minimized, or maximized)
Window font

You can save view information for up to eight windows.

Getting Help

For more information about managing session windows, refer to the online help:

1. Select **Procedures** from the Help menu.
2. When the help window appears, search for managing or scroll down to **Managing Workstation Windows**.

   Select choices from that list for detailed information.

© Copyright IBM Corp. 1989, 1996

Chapter 7. Printing

You can use Personal Communications to print from display, printer, or router sessions.

From display sessions, print all (**Print Screen**) or part (**Trim Print**) of the screen of your session window on a workstation printer.

To print only part of the session window, drag the mouse to create a trimming rectangle around the part of the window you want to print and then select **Print Screen** from the File menu.

From printer sessions, direct printing from an S/390, AS/400, or S/36

Configure a printer session to designate a workstation printer as a system printer that will use either the printer definition tables (PDTs) provided with Personal Communications or the Windows printer drivers. Note that you can configure one printer session only to an S/36 system. Refer to the online help for more information.

From AS/400 Utilities, start Virtual Printers and send print data to an AS/400 system printer as though it were directly connected to your workstation. Refer to "Virtual Printers (PC400 Only)" on page 70 for more information.

You can select either PDT files or Windows printer drivers that Personal Communications can use

To print files based on printer control information, such as control codes and the printer output format, defined in the PDT.

To print files based on printer setup parameters, such as paper size and form type, that you define in **Printer Setup**.

For more information about printing, refer to the *Personal Communications Reference for Windows*.

Setting Up the Printer

To set up a printer for a printer session, and to set up the *Print Screen* function for the display session, specify information for each printer driver:

1. Select **Printer Setup** from the File menu
2. When the Printer Setup window appears, refer to the online help for information about the printer settings.

© Copyright IBM Corp. 1989, 1996

These settings are available only when using the Windows printer drivers.

Personal Communications prints with the Windows printer drivers or with the printer definition table (PDT) files it provides.

3 Select **OK** after completing setup.

PDT Files

PDT files define the transfer of characters and control codes to a printer, and the printer output format. If the printer definition table (PDT) file is used, the Windows printer driver is not used. Instead, Personal Communications generates print outputs based on printer control information defined in the PDT file.

Refer to the *Personal Communications Reference* for more information about PDT files.

Setting the Printer to Be Used

You can set the current printer to use either the Windows printer driver or a PDT file.

For information on creating PDT files, refer to the *Personal Communications Reference for Windows*.

Using the Windows Printer Driver

To set up your printer to use the Windows printer driver:

1 Select **Printer Setup** from the File menu of the session window.

The Printer Setup window lists the supported printers.

2 Select the printer driver to be used from the **Printer** list box.

3 Confirm that the **Use PDT file** check box is not selected and then select **OK**.

Personal Communications will now use the printer driver you selected and the Printer Setup window is closed.

Using PDT Files

To use PDT files:

1 Select **Printer Setup** from the File menu of the session window.

The Printer Setup window appears.

2 Select the port to be used from the **Printer** list box.

Selected PDT files are available for the port selected here.

3 Select **Setup** and then specify the paper size of the selected printer driver.

4 Select the **Use PDT file** check box and then select **Select PDT**.

The Select PDT file window appears.

5 To use the existing PDT file, select a PDT file to be used and then select **OK**.

To use a PDF file converted to a PDT file:

a. Select **Convert PDF**.

b. Select a PDF file to be converted from the list in the Convert PDF to PDT window and then select **Convert**.

The PDF File Converter window displays the result of PDF conversion. If there are any errors during the conversion, they are listed in the window.

c. When you select **Save List**, the window list is saved in **.LST** file in the **PDFPDT** subdirectory.

To close without saving the list, select **Close**.

After the file is converted, control returns to the Select PDT file window and the converted PDT file appears in the list.

d. Select the PDT file and then select **OK**.

6 When the Printer Setup window appears, select **OK**.

After the printer is set, the Printer Setup window is closed.

ZipPrint (PC/3270 Only)

Use ZipPrint to print PROFS or OfficeVision notes, calendars, OV documents, CMS files, XEDIT workspaces, and 3270 session screens.

Preparing to Use ZipPrint

Before you can use ZipPrint, DDE/HLLAPI must be enabled for the sessions. To do this, select **API Settings** from the File menu and refer to the online help for detailed instructions. DDE/HLLAPI is enabled by default.

Starting ZipPrint

Start ZipPrint before you start any display sessions. The ZipPrint menu is added to the menu bar of the specified session window; then you can use it from the menu bar the same as with the other functions.

Start ZipPrint by double-clicking the **ZipPrint** icon in the Personal Communications Program Group window. This starts ZipPrint for Session A only.

For more information about ZipPrint, refer to the *Personal Communications Reference*.

Chapter 8. Editing

You can edit the contents of your session window using the Windows Clipboard and the Edit menu. You can also link the session window with a Windows application program by running **CopyLink** and **PasteLink** or **PasteSpecial**.

Note: The command you should use for PasteLink or PasteSpecial depends on the application program you are using.

Editing by Linking to Windows Application Programs

Linking to Windows application programs supporting **PasteLink** or **PasteSpecial** lets you paste session-window data to the windows of those application programs. You can run **CopyLink** when DDE/EHLLAPI is usable.

Confirming the DDE/EHLLAPI Settings

To check whether DDE/HLLAPI is currently set to usable status:

1. Select **API Settings** from the File menu.

   The API Settings window appears.

2. Make sure the **DDE/EHLLAPI** check box is selected.

   If the box is checked, DDE/EHLLAPI is set to usable status. Continue to step 4.

3. If the box is not checked:
   a. Click the **DDE/EHLLAPI** check box and then click **OK**.
   b. Stop and then start your session to enable the new settings.

4. If DDE/EHLLAPI was already set to usable status, select **OK**.

© Copyright IBM Corp. 1989, 1996

Using CopyLink and PasteLink

To use **CopyLink** and **PasteLink**:

1. Mark the session window area for which **CopyLink** should be issued.
2. Select **CopyLink** from the Edit menu.

   If the session window is already linked with a Windows application program, **CopyLink** appears in gray and cannot be selected. In this case, force the application program to end the linkage, or stop the application program. Then you can select **CopyLink**.
3. Start the Windows application program for the window to which an area should be copied.
4. Specify the location for which **PasteLink** or **PasteSpecial** should be run.
5. Issue **PasteLink** or **PasteSpecial** by using the menu for the application program.

   The contents of the marked area are pasted into the specified location in the window of the application program.

   CopyLink is now completed.

When the contents of the marked area in the session window are updated during linking, the contents of the area pasted to the window of the linked application program are also updated.

Copying Table Data to a Spreadsheet

You can use the **Cut**, **Copy**, **CopyLink**, or **CopyAppend** choices in the Edit menu to copy data in the session window to the window of a Windows spreadsheet application program.

To use **Copy**, select the **Paste** or **PasteLink** choice in the application program window into which data is to be copied.

Data in the marked area can be copied in the following three data formats, depending on the format supported by the spreadsheet for the window to which data is to be copied:

Sylk format Data format for general-purpose spreadsheets, such as Multiplan**

Biff3 format Data format for Microsoft** Excel**

Wk3 format Data format for Lotus** 1-2-3**

Note

Whether application programs, such as Excel or Lotus 1-2-3, also support these data formats in subsequent versions depends on individual application program specifications.

Individual items of data in tables of the session window are divided automatically such that they are suitable for spreadsheets, and they are copied into individual cells of tables in the application program.

Copying Marked Data without Dividing It into Cells

To paste data in the marked area per line, without dividing it into individual cells, add the following lines to the workstation profile:

```
[Edit]
Sylk=N          (If Sylk format data is not divided into cells)
Biff3=N         (If Biff3 format data is not divided into cells)
Wk3=N           (If Wk3 format data is not divided into cells)
```

Copying Lines Containing Only Operational Signs

If data in the marked area contains signs, such as +, –, =, or |, the signs are regarded as being ruled lines of the table. Once they are removed, only numeric data is copied.

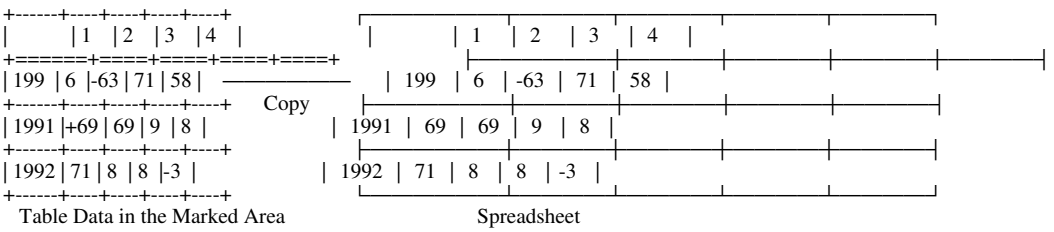

To copy these signs without replacing them with null characters, add the following lines to the workstation profile:

```
[Edit]
MaskGridCharacter=N
```

Copying Data in Cells As Text Data

Data in the marked area is treated as numeric data by default. Therefore, currency signs, such as $, and punctuation marks, such as commas, are removed before copying. To copy data containing such signs and marks as text data rather than numeric data, add the following lines to the workstation profile:

```
[Edit]
ConvertToNumeric=N
```

Data in the marked area containing signs and marks is then copied as text data. In addition, all numeric data that does not contain signs and marks is also copied as text data.

Getting Help

For information about all the tasks you can perform with the Edit menu choices, as well as how to mark and then edit an area within the window, refer to the online help:

1. Select **Index** from the Help menu.
2. When the help window displays, select **Menu Bar Commands of the Workstation Window**.
3. Select **Edit** from the list of Menu Bar Commands.

Chapter 9. Transferring Files

Personal Communications File Transfer enables the transfer of one or more files between a host system and workstation. You can define file transfer options in advance to help you transfer a variety of files quickly and easily.

File Transfer is quite different from the PC400 function, Data Transfer, which is described on page 64 . The main differences are listed here:

Type of Transfer	Products required on an AS/400 system	Access Method	Sending and receiving unit	Type of connection to an AS/400 system
File Transfer	Personal Communications Tools (APVAFILE)	Transfer menu in session window	Entire file	Display session
Data Transfer	PC Support/400 V2R2 or V2R3 or OS/400 V3R1 or later[1]	AS/400 Utilities or the Data Transfer Function choice on the Transfer menu	Field, record, or file in a database	No display or printer session required
OS/400 provides the host transaction program for Data Transfer.				

Note

When you first configure a PC400 session, the Transfer menu and the corresponding tool bar icons let you do **file** transfer as defined in the preceding table. You can change the function to **data** transfer by selecting **Data Transfer Function** from the Transfer Setup menu.

With Personal Communications, you can perform the following file transfer functions:

Send files to the host system
Send files using the Transfer menu or, from 3270 sessions, the SEND command from the DOS prompt.

Receive files from the host system
Receive files using the Transfer menu or, from 3270 sessions, the RECEIVE command from the DOS prompt.

Use list files
A list file is the same for either sending or receiving files. Use list files if the same files are transmitted frequently. The default list file extension is .SRL.

© Copyright IBM Corp. 1989, 1996

Transferring Files

Create, test, replace, and delete templates
Create a template to have Personal Communications automatically generate a workstation or host file name and transfer type when you select a file to be sent or received.

Define transfer types
Define up to 16 transfer types for each host system. Text, binary, and append (except for CICS) are initially set as transfer types.

Set transfer options
Set file transfer options such as file transfer timeout, packet size, and the method for displaying file transfer progress status.

Select, create, and customize translation tables
Select translation tables to define which translation table is used during file transfer.

Import or export files (PC/3270 only)
Import/Export is an office system communication program and an application program run on the IBM Customer Information Control System (CICS). The import/export function makes it possible to import or export Final Form Text (FFT), Revisable Form Text (RFT), and PC documents.

When you export a file, your workstation receives the file you exported and an interchange document profile (IDP) file. Before you can import a file to your workstation, you need to create an IDP file with transmission information.

Create interactive document profile (IDP) files (PC/3270 only)
An IDP file contains document header information, has the same name as the file to be transferred, and has the extension .IDP.

To create an IDP file, select **Setup** from the Transfer menu.

Host Requirements

Before you can send or receive files one of the following file transfer programs must be installed on the host system.

IBM 3270-PC File Transfer Program, 5665-311 (MVS/TSO)
IBM 3270-PC File Transfer Program, 5664-281 (VM/SP)
IBM 3270-PC File Transfer Program, 5798-DQH (CICS/MVS)
Personal Communications Tools Program Package (APVAFILE)
- 1/4-inch tape 85G9969
- 1/2-inch tape 85G9973
- 8-mm tape 46H8353

Getting Help

For more information about transferring files, refer to the online help:

1. Select **Procedures** from the Help menu.
2. When the help window displays, search for transfer or scroll down to **Transferring Files**.
3. Select choices from that list for detailed information.

Chapter 10. Setting Up a Session Window's Appearance

You can use the following functions from the Appearance menu to define the appearance of your session window:

Display Setup
Customize a variety of characteristics, such as the cursor, pointer, rule line, and trimming styles, graphics, sound, and color palette, in the display session.

Color Mapping
Set the colors used in session windows.

Font
Choose the font to use for display session windows, the style, and whether it will be an automatic sizing font or a fixed size font. If you use a fixed size font, you can also choose its size. The set of fonts from which you can choose depends on the type of display you are using.

Note: You cannot change the font size when the session window is maximized.

Window Setup
Change the appearance and title of the session window and change the session icon.

Tool bar
Add, delete, move, copy, and rearrange buttons on the tool bar.

The settings are stored in a workstation profile.

© Copyright IBM Corp. 1989, 1996

Showing or Hiding the Menu Bar and Tool bar

You can show or hide the menu bar or tool bar. To do this:

1. Click the top-left corner of the session window to display the system menu.

   Hide Menu Bar appears when the menu bar is shown

   Show Menu Bar appears when the menu bar is not shown

   Hide Tool Bar appears when the tool bar is shown

   Show Tool Bar appears when the tool bar is not shown

2. To hide either the menu bar or tool bar, select **Hide Menu Bar** or **Hide Tool bar**.

3. To show either the menu bar or tool bar, select **Show Menu Bar** or **Show Tool Bar**.

   If you hide the menu bar, the Popup Menu Bar choice is added to the system menu. The Popup Menu Bar shows a cascading menu that contains all commands in the hidden menu bar.

Getting Help

If you're not sure how to set the session window's appearance options, view the detailed instructions in the help.

1. Select **Procedures** from the Help menu.

2. When the help window appears, search for appearance or scroll down to **Changing the Screen Appearance**.

   Select choices from that list for detailed information.

Chapter 11. Setting Up and Using the Assist Functions

Personal Communications provides auxiliary functions that let you operate the system more efficiently. You can use the following functions from the Assist menu of the session window.

- Keyboard and macro functions
- Hotspots setup
- Keyboard setup
- Popup keypad setup
- Mouse setup
- Macro functions

This chapter describes these auxiliary functions, and explains how to set up and use them.

Keyboard and Macro Functions

A Keyboard/Macro Function command lets you run macros or Personal Communications-supplied key functions without using the keyboard. Run the macros or key functions from the current cursor position in the session window.

Macro Functions

A macro is a sequence of key or mouse actions and host commands that you can perform with a single action, such as a keystroke. Before you can use a macro function, you need to define it. For more information, see “Macro Setup” on page 60.

Key Functions

Personal Communications provides many key functions that can be assigned to the keys on the keyboard, the mouse buttons, or the buttons of the pop-up keypad. You can also use them to generate macros.

© Copyright IBM Corp. 1989, 1996

Hotspots Setup

A *hotspot* is an area of the session window on which you can double-click the left mouse button to perform a command or function. You do not need to use the keyboard. For example, you can double-click a PF key number to perform the PF key function.

3D Hotspots

Select **Show hotspots** to get 3D hotspots; these only require a single click, and they stand out on your screen.

You can define the following actions in a hotspot:

Simulate function keys

Play a macro that has the same name as the character string you select on the session window

Enter the selected string at the cursor position

Simulate the Enter key at the cursor position

Using Hotspots

Note

You must have a mouse to use hotspots.

To use a hotspot:

1. Move the mouse pointer to the hotspot displayed in the session window.
2. Double-click the left button of the mouse, except for 3D hotspots, which only require a single click.

   Personal Communications determines whether you have specified a hotspot function that matches what appears at the position of the mouse pointer. If so, it processes the hotspot. When two or more hotspots are specified for a single character string, the *first retrieved hotspot* is processed.

Hotspots are retrieved in the following order:

(1) PFnn, FPnn, Fnn, nn
(2) Point-and-select (run the macro)
(3) Point-and-select (enter the selected string)
(4) Point-and-select (enter at the cursor position)

Keyboard Setup

You can use Keyboard Setup to modify the function defined for each key on the keyboard, except some reserved keys.

You can define the following functions for the keys.

Performing a key function
Playing a macro
Entering characters

Keyboard File

When you specify a key, you can save the new keyboard layout in a file (.KMP). If you create two or more keyboard files, you can alternate between them as required.

To assign a function to a key on the keyboard:

1 Select **Keyboard Setup** from the Assist menu.

2 When the Keyboard Setup window appears, select **Customize**.

Note

Select **Spain** from the Language menu during keyboard setup if you want Catalan support.

3 Assign the key functions, referring to the online help for detailed instructions.

4 Save your changes and exit the Customize Keyboard window.

5 Select **OK** after completing the setup.

Assist Functions

You can reset either the entire keyboard or specific keys to defaults.

To reset the entire keyboard, set the current keyboard to **IBM Default** in the Keyboard Setup window.

To reset specific keys, select a key in the Customize Keyboard window and then select **Default** from the Current Actions for Selected Key box.

Note: There are 5 keys that you cannot redefine and they are gray in Keyboard Setup; these keys are: Alt, AltGrp, Print Screen, Scroll Lock, and CapsLock.

Pop-Up Keypad Setup

The pop-up keypad is a small window in which some buttons are arranged. To display the pop-up keypad, put the pointer anywhere in the session window and press the right mouse button.

Note

You must have a mouse to use the pop-up keypad.

You can allocate the following functions to these buttons:

A standard key function provided by Personal Communications
A user-specified macro
A character entry

To perform these functions, you only need to click a button on the pop-up keypad with the left mouse button.

To view the description of a short-name key function or macro, click the right mouse button while pointing at one of the function or macro names.

Pop-Up Keypad File

You can specify the number of buttons displayed in the pop-up keypad, the functions allocated to those buttons, and colors of the buttons. You can save the specified pop-up keypad contents in a pop-up keypad file (also referred to as a *poppad* file).

A pop-up keypad file (***.PMP**) contains the information for the number of buttons displayed in the pop-up keypad, the functions allocated to those buttons, and color information. You can define which pop-up keypad file is allocated to the pop-up keypad.

Using the Pop-Up Keypad

To use a pop-up keypad:

1. With the mouse pointer anywhere in the session window, click the right mouse button.
2. Select **Pad 1, Pad 2, Pad 3**, or **Pad 4**.
3. Click the required button in the pop-up keypad.

To set up the pop-up keypad:

1. Select **Popup Keypad Setup** from the Assist menu.
2. When the *Popup Keypad Setup* window appears, set the required items, referring to the online help for detailed instructions.

   If you want to edit the pop-up keypad file, select **Customize** and then make your changes.
3. Select **OK**. The pop-up keypad you selected is ready for use.

Mouse Setup

The **Mouse Setup** command lets you allocate functions to the right and left buttons of the mouse; this enables you to perform the following actions without having to use the keyboard:

Running the Personal Communications-supplied key functions
Running the user-defined macros
Running character strings

Mouse File

You can save the functions defined for the mouse buttons in a mouse file (***.MMP**). You can create two or more mouse files and switch between them as required.

To set up the mouse and assign functions to the mouse buttons:

1. Select **Mouse Setup** from the Assist menu.

   The current settings appear in the Mouse Setup window.

2. Set up the required items, referring to the online help for detailed instructions.

   If you want to create or edit a mouse file:

   a. Select **Customize**.

   b. When the Customize Mouse window appears, allocate functions to the right and left buttons of the mouse. These appear in **Current Action for Mouse Button**.

   c. Select the required functions from **List of Key Actions**.

   d. Save your changes and then select **OK**.

3. Select **OK**.

   The mouse setup is complete.

Macro Setup

A macro is a sequence of key or mouse actions and host commands that you can perform with a single action, such as a keystroke. You can edit an existing macro or create a new macro by selecting **Macro Setup** from the Assist menu.

Using a Macro

You can use a macro in various ways. Table 2 lists examples of how you can set up and then use macros.

Table 2. Macro Use Examples and Settings

If you want to...	Do this...
Automatically play a macro when your session starts.	Set an **Auto-Start Macro**.
Play a macro while attached to a host application.	**Start Macro Play**.
Play a macro with the keyboard or macro function.	Use the **Keyboard/Macro Function**.
Click on a hotspot to play a macro.	Set a **Hotspot**.
Assign the macro to a pop-up keypad button.	Customize the **Pop-Up Keypad** file.
Press the mouse button to play a macro.	Customize a **Mouse** file.
Press a key on the keyboard to play a macro.	Customize a **Keyboard** file.

Creating a Macro

To create a macro:

1. Select **Macro Setup** from the Assist menu.
2. When the Macro Setup window appears, select **Customize**.
3. When the Customize Macro window appears, edit the macro. You can enter macro statements directly or select a macro from the list of key actions.

   Refer to the online help for detailed information.
4. Click **OK** to save the macro file.

Macro Statements

You can use the following statements when you create a macro:

Key function
Use Personal Communications-supplied key functions

Macro
Define a macro within another macro but you cannot create a macro in a permanent loop where the first macro is repeatedly called at the end of the macros.

Character
Use any characters in the **Character** list in the Customized Macro window.

Character string
Use character strings you can type from the keyboard. You must use a double quotation mark (“) at the beginning of the character string.

Wait condition
Specify wait conditions to stop the process until the specified time has elapsed or the status satisfying the specified condition occurs.

Tokens
You can use tokens, such as goto and run, to add logic.

Setting Up a Macro

To set up a macro to autostart:

1. Select **Macro Setup** from the Assist menu.

   The Macro Setup window appears.

2. Set a macro to auto-start when your workstation starts.

3. Refer to the online help for detailed instructions and then select **OK** after completing your setup.

Recording and Playing Macros

To start macro recording, select **Start Recording Macro** from the Assist menu, type the macro name, and then select **OK**.

To quit macro recording, **Quit Recording Macro** from the Assist menu. The recording operation is canceled, and the macro is not saved.

To pause macro recording, select **Pause Recording Macro** from the Assist menu. The recording operation stops. To restart recording, select **Resume Recording Macro**.

To stop macro recording, select **Stop Recording Macro** from the Assist menu. Recording ends and the macro is saved in a specified file.

To start macro playing, select **Start Playing Macro** from the Assist menu, select the macro and then select **OK**. The selected macro starts to play.

To stop macro playing, select **Quit Playing Macro** from the Assist menu. The macro playing stops.

Chapter 12. AS/400 Utilities

PC400 provides the following AS/400 utilities:

Data Transfer
Transfer data from the AS/400 system to your workstation, or from your workstation to the AS/400 system. (Record-level data transfer).

Shared Folders
Store and share information in AS/400 folders by assigning an unused workstation drive to a folder.

PCS/400 Router API
Establish communications to start PC Support/400 Router API applications from the DOS prompt.

Virtual Printers
Use a printer attached to the AS/400 system as a workstation printer. You can control a virtual printer from your workstation.

To start an AS/400 utility, double-click on the **AS/400 Utilities** icon in the Personal Communications group box.

The AS/400 Utilities window appears.

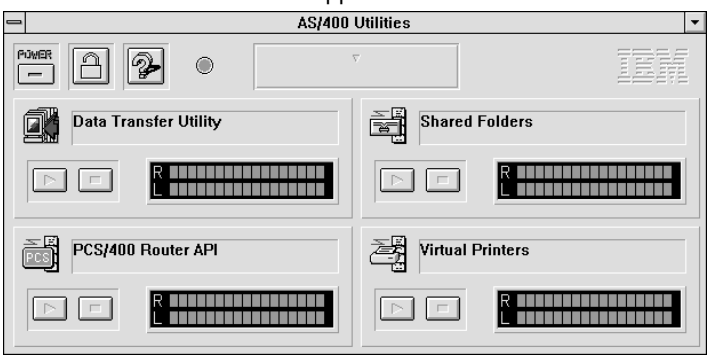

To open one of the AS/400 utilities, click on the start button ( ) for that utility.

For more information, refer to the online help in the AS/400 Utilities window.

© Copyright IBM Corp. 1989, 1996

Data Transfer (PC400 Only)

PC400 Data Transfer enables you to transfer data between the AS/400 system and workstation. To use the data transfer function, select the **AS/400 Utilities** icon and then select the play button ( ) for the Data Transfer Utility.

Note

Before you can transfer data with PC400:

IBM PC Support/400 (5738-PC1) must be installed on the host system, unless IBM OS/400 Version 3 or later is installed.

You must have an active APPC communication link, which can be provided either by the Data Transfer Utility or by the PC Support/400 Router. However, if you run Data Transfer from a display session (after changing the Transfer menu functions to perform Data Transfer), you do not need any other communication link.

There are two types of data transfer, depending on the direction of the transfer.

Data sending

Data is transferred from your workstation to the AS/400 system. You can transfer data to any of the following destinations:

Existing members in an existing AS/400 physical file
New members in an existing AS/400 physical file
New members in a new AS/400 physical file

Note: You cannot transfer data from a workstation file to an AS/400 logical file.

Data receiving

Data is transferred from the AS/400 system to your workstation.

While receiving data from the host, you can specify the data to be received and where the data is to be output.

Receivable data includes:

An entire AS/400 file
Part of an AS/400 file
Data combined from several AS/400 files
Summary of record groups

Specify the following output destinations:

Display
Disk
Printer

Also, you can specify when to receive data (date and time) and the numeric value format.

For more information, refer to the online help in the Data Transfer Utility window.

For additional information, refer to the *Personal Communications Reference for Windows*.

Shared Folders (PC400 Only)

The Shared Folder function allows AS/400 folder information to be shared with a workstation. This increases the virtual available hard disk space on your workstation so you can handle more information.

The Shared Folder function lets you assign AS/400 folders to any unused drives on your workstation. By assigning AS/400 folders to these drive characters, you can work with the information within those AS/400 folders as if the information were stored on your workstation. Therefore, you can manipulate data in AS/400 folders in exactly the same way as that stored on your hard disk or on diskettes.

Before Using Shared Folders

Before you can use Shared Folders:

The Shared Folders function must be enabled. Personal Communications enables this function by default.

To confirm that it is enabled, you can double-click **Configuration and Program Options** in the Administration Tools folder and then click **Add or Delete DOS APIs**.

The **Shared Folders function** check box should be checked.

You must have a communication link to an AS/400 system.

Starting Shared Folders

To start the Shared Folder function, do the following.

1. Select **AS/400 Utilities** and then select the play button ( ) for the Shared Folders utility.

   The Shared Folder window appears.

2. Select **Configure**.

   The Configure Shared Folder window appears.

3. Select a **Drive** to be assigned to an AS/400 shared folder.

4. Select the **System Name** of the AS/400 system containing the shared folder you want to use.

5. Select the **Folder Name** you want to use.

   Note

   If you want to assign a drive to a lower-level folder, double-click on its upper-level folder from the **Shared Folder Name** list. The lower-level folders in the selected folder appear in **Shared Folder Name** list.

6. Select **Assign**.

   The contents are displayed in the **Current Status** box.

7. After the folder is assigned to the drive, select **Exit** to return to the Shared Folders window.

   If you want to save this setting, refer to “Saving the Assigned Drive Settings” on page 67.

You can now work with the contents of a shared folder through the assigned drive.

Releasing Drives

To release assigned drives:

1. Select **Configure** from the Shared Folder window.

   The Configure Shared Folders window appears.

2 Select a drive name to be released from **Drive**.

3 Select **Release**.

The specified drive disappears from **Current Status**.

4 After the drive has been released, select **Exit**.

This completes the release of the specified drive.

Saving the Assigned Drive Settings

To save the settings for the assigned drives, select **Save** from the File menu of the Shared Folder window.

The settings for the assigned drives are saved to the Shared Folder Profile (**PCSFLR.INI**). When you open the Shared Folder window, Personal Communications uses these saved settings.

Note

If you select **Save Current Assignments on Exit** in the File menu, the current settings are saved when you exit the Shared Folder window.

Shared Folders Considerations

The following section describes Shared Folder considerations and command restrictions.

Note

You cannot use Shared Folders if you are connecting to an AS/400 system with the new SNA-over-Async attachment but you can if you are connecting with the SNA-over-Async V4.0 attachment.

DOS Limitations

There are some DOS limitations when working with shared folders.

You cannot use a shared folder from the DOS prompt when an attachment other than twinaxial is being used.

You cannot use the Shared Folder function during full-screen display.

You cannot run a DOS program within a shared folder from the DOS prompt. However, you can run a Windows program within a shared folder.

Output to a console cannot be redirected to a file in a shared folder from the DOS prompt.

You cannot print a file to a printer by redirection from a DOS prompt if a folder drive is set as the current drive.

You cannot use a shared folder from the DOS prompt when Novell DOS 7 is used as the base operating system.

DOS Command Limitations

There are some workstation commands you cannot use when working with folders; for example:

CHKDSK, DISKCOMP, DISKCOPY, FDISK, FORMAT,
JOIN, LABEL, RECOVER, SUBST

When you are using Shared Folders, you cannot use workstation applications that do direct sector input/output to your hard disk.

The following commands have restrictions when working with shared folders.

BACKUP
If two drives are assigned to the same folder, do not attempt to to back up the folder from one drive to the other.

BREAK
BREAK must be enabled (**BREAK=ON**) for the Ctrl+Break sequence to work properly with a shared-folder operation.

COMP
When you use the **COMP** command to compare multiple files and the target file is in a folder, the shared folder does not close until the **COMP** program completes.

COPY, XCOPY
Files cannot be copied to the root directory of a folder name.

When you run the **XCOPY** command against a shared-folder drive from the DOS prompt, the following message appears:

Invalid drive specification

In this case, assign the shared-folder drive to a valid drive and path using the SUBST command as in the following example.

```
SUBST I: C:\
```

You cannot use the virtual drive as a shared folder drive regardless of the drive and path specified by the SUBST command.

Filters

Filters might fail when the current drive is assigned as a system drive.

Using PCS/400 Router API (PC400 Only)

You can establish communications to start PC Support/400 Router API programs from the DOS prompt.

Before you can use PC Support/400 Router API, the virtual device driver, VPCSRTRD.386, must be loaded when you start Windows.

Of the PC Support/400 application programs provided by IBM, only the basic DOS version can be used. However, IBM might not provide the Basic DOS version of application programs for some communication attachment types. User-created application programs can be used if they are of the Basic DOS version.

For details of the communication attachment types and PC Support/400 DOS versions, see *PC Support/400: DOS Installation and Management Guide* (SC41-0008).

Getting Help

For more information about PCS/400 Router API, select **Index** from the Help menu and then search for PCS/4 .

Virtual Printers (PC400 Only)

The virtual printer function lets you use a printer attached to an AS/400 system as though it were directly connected to your workstation.

You can send print data to an AS/400 system by the following printer data types:

SNA Character String (SCS) data
PC code to SCS
PC code

If you have OS/400 Version 3, Release 1 or later, you can also use the following AS/400 resources:

Printer device
Spooled file

Note

You can operate these resources only if a specified local port (LPT) is connected through the Network Print Server transaction program, which is available with OS/400 V3R1 or later. If the Virtual Printers program fails to connect with the Network Print Server transaction program, it tries to connect with the Virtual Printer transaction program, which is supported by the following versions of OS/400:

Version 3 Release 1 or later versions
Available for all

For earlier versions
Available for an AS/400 with Client Access/400 or PC Support/400 installed

The following printer operations are not available for an LPT connected through the Virtual Printer transaction program:

Start Printer
End Printer
Output Queue
Network Print Server

Using a Virtual Printer

To use the virtual printer function:

1. Click on the **AS/400 Utilities** icon in the Personal Communications folder.
   The AS/400 Utilities window appears.
2. Click on the Virtual Printer start **( )** button.

Virtual Printer Considerations

The following sections describe Virtual Printer considerations.

Sending Print Data to an AS/400 System

If you display a window and a message window, with the exception of the Work with Output Queue window, the Virtual Printers program does not send print data to an AS/400 system. Therefore, if you display either of these on your screen when you are sending print data with the Virtual Printers program, timeout might occur and a spooled file might be forced to close.

Using PC Code to SCS As the Printer Data Type

The following limitations occur:

The Virtual Printers program does not handle PC codes from X'00' through X'1F' as character codes.

You cannot send graphical data to an AS/400.

When you use the PC code to SCS option to print a spooled file, it might not print correctly if the printer does not support SCS control codes in the same way as PC400 printer sessions.

You also have the following limitations, depending on whether you send print data from a DOS box or a Windows application program.

From the DOS box

If you send print data from a DOS box, only PC codes from X'20' through X'7E' are translated to EBCDIC codes correctly; the other PC codes might not be translated correctly.

From a Windows application program

When you send print data from a Windows application program, you need to use the SCS Virtual Printer driver (PCSVPSCS.DRV) as a printer driver.

Unlike other printer drivers, PCSVPSCS.DRV is designed for general printers rather than for a specific printer. Because of this, PCSVPSCS.DRV assumes a paper size that is a little smaller than that of other printer drivers when the output goes to a page printer that has default page margins. PCSVPSCS.DRV page sizes are as follows:

	PCSVPSCS.DRV	Physical Paper Size
Letter	203 x 262 mm	8.5 x 11 inch
Legal	203 x 338 mm	8.5 x 14 inch
A4	197 x 279 mm	210 x 297 mm
B5	169 x 239 mm	182 x 257 mm

Displaying Spooled Files

You can display up to 200 spooled files on the Work with Output Queue window.

Customizing Communication

When you customize communication for Virtual Printers, configure a user profile to enable auto logon.

Messages from an AS/400 System

The Virtual Printers program displays messages from AS/400 systems; they typically start with IWS or CPF. For more information about these messages, refer to the AS/400 documentation.

Out of Memory

If there is not enough memory for a Virtual Printer operation, you cannot print data through an LPT even if an LPT is assigned to a virtual printer. If this occurs, Print Manager or application programs will display an error message that says the LPT is not available.

Chapter 13. PC400 Database Access

PC400 Database Access is a query utility that lets you access the AS/400 system or workstation database and get data using Microsoft's open database connectivity** (ODBC) Level 2 drivers.

When you use Database Access, you can do the following from any window:

- View and modify the structured query language (SQL) statements, such as SELECT, FROM, and WHERE, that are created automatically
- View available database table lists
- Copy spreadsheet data to the clipboard
- Put data in the main window spreadsheet or other applications, such as Microsoft Excel, Lotus 1-2-3, and Borland dBASE
- Send data to a printer

Before Using Database Access

Before you can use the database access function, you need to have the following software installed on your workstation:

- Microsoft Windows Version 3.1 or later
- Microsoft Open Database Connectivity Driver Manager
- Personal Communications ODBC Driver (supporting ODBC level 2 APIs)

Refer to the online help for detailed information about the database access function, including instructions for accessing Database Access from Microsoft Excel or Lotus 1-2-3 to get and paste query data from the databases.

Using the ODBC Driver

Use the ODBC Driver to add, delete, or configure data sources, or to install new ODBC drivers on your workstation.

© Copyright IBM Corp. 1989, 1996

Using Database Access

Use the Database Access utility to retrieve data from any database on a data source that complies with Microsoft ODBC standards.

Chapter 14. PC Organizer (PC400 Only)

You can use the PC Organizer to run DOS commands and applications or Windows applications from a 5250 display session.

AS/400 Requirements

Before you can use the PC Organizer, one of the following programs must have been installed on the AS/400 system:

Client Access/400 (or OS/400 V3 or later)
PC Support/400 (5738-PC1)

Starting the PC Organizer

To start the PC Organizer:

1. Start a 5250 display session.
2. Sign on to the AS/400 system.
3. Enter the following command on the AS/400 command line:

   STRPCO PCTA(NO)

Note

PC400 does not support the PC Text Assist (**PCTA**) function, so you should specify this parameter with ***NO**. Even if you specify ***YES**, you cannot use the PC Text Assist function provided by the PC Support/400 Workstation Feature.

© Copyright IBM Corp. 1989, 1996

PC Organizer

You can now use the PC Organizer functions in a 5250 display session by using one of the following methods:

Display and then select choices from the menu.

To display the PC Support/400 or Client Access/400 Organizer menu, enter:

GO PCOMNU

Enter PC Organizer commands.

To start the PC Organizer functions, enter:

STRPCCMD

Getting Help

Refer to the online help for more information about using the PC Organizer.

1. Select **Procedures** from the Help menu.
2. When the help window appears, search for organizer or scroll down to **PC Organizer (5250 Session)**.

   Select topics in the list to view information about starting and using the PC Organizer, using the PC Organizer menu, and the differences between the PC Organizer provided with PC400 and PC Support/400.

Chapter 15. Text Assist (PC400 Only)

With Personal Communications, you can use the improved text editing capability of Text Assist provided by the OfficeVision/400 word processing function to create a document or short messages, or to edit an existing document.

For more information about using Text Assist, refer to the documents for the OfficeVision/400 program.

The Text Assist function in Personal Communications is a “Controller Text Assist,” not the “PC Text Assist” supported by PC Support/400 Workstation Feature.

Controller Text Assist in Personal Communications provides the following functions that are not included in PC Text Assist:

Line commands
132 columns

Controller Text Assist in Personal Communications does not, however, provide the multicolumn edit function that is included in PC Text Assist.

After starting a 5250 display session, you can use the Controller Text Assist function without invoking the **Start PC Organizer** (**STRPCO**) command at the host.

Note: In the Text Assist environment, Alt key functions are assigned to the Ctrl key state to avoid conflicts with existing emulator functions or the functions reserved by Windows. For example, the Word Underscore (WrdUnd) key is Ctrl+W rather than Alt+ W. Many of these functions can be remapped to the Alt key state without conflicting with emulator functions.

When you draw a line using the cursor draw option of the OfficeVision/400 program, the insert mode is not available.

AS/400 Software Requirements

The AS/400 system must have one of the following programs installed to support the Text Assist features:

OS/400 V2R2.0 with cumulative PTF C3285220 with PTF SF14687
OS/400 V2R3.0 with PTF SF14495
OS/400 V3R0.5
OS/400 V3R1.0, or later

© Copyright IBM Corp. 1989, 1996

Text Assist Key Functions

Following is a list of OfficeVision/400 Text Assist key functions:

Function	Description
Begin of Line	Moves the cursor to the beginning of the line
Begin Bold	Begins bold highlighting
Bottom of Page	Moves the cursor to the bottom of the page
Carrier Return	Ends a line of text or a paragraph by inserting a carrier return
Center Text	Centers a line of text
End of Line	Moves the cursor to the end of the line
End of Page	Inserts an “end of page” character at the cursor position
End Bold/Underscore	Ends bold highlighting and underlining
Half Index Down	Begin subscript or end superscript
Half Index Up	Begin superscript or end subscript
Insert Symbol	Displays a menu for special symbols
Display Text Codes	Shows hidden text controls
Next Column	Inserts a “next column” instruction at the cursor position.
Next Stop Code	Moves the cursor to the next stop code symbol
Required Backspace	Moves the cursor one space to the left
Required Space	Inserts a required space to keep words together on a line
Required Tab	Indents a block of text
Stop Code	Inserts a stop code at the cursor position
Top of Page	Moves the cursor to the top of the page
Begin Underscore	Begins underlining text
Word Underscore	Underlines the word that starts at the cursor position

Chapter 16. Where To Find More Information

This chapter discusses getting help when you are installing, configuring, or using Personal Communications.

Online Help

The online help describes how to install, configure, and use Personal Communications, but it does not provide all the details about every function. The online help includes information about all aspects of configuring and using Personal Communications.

Use the online help to obtain information about:

- Menu command contents
- Operation procedures
- Operations in dialog boxes
- Meanings of the terms displayed in dialog boxes
- Causes of errors and the corresponding actions to take
- Mouse-based operations
- Operation without a mouse
- Detailed explanations of specific terms
- Further technical information about Personal Communications

Note: Online help is not available if you install Personal Communications with the minimum install option.

How to Use Online Help

To display online help, click on the Help menu or the **Help** button on the tool bar.

Personal Communications online help can be used in the same way as that for Microsoft Windows. Refer to the Microsoft Windows documentation for details.

© Copyright IBM Corp. 1989, 1996

Messages

This section describes the Personal Communications online messages. Online messages are displayed during Personal Communications sessions. A message does not always mean an error occurred. For example, a message might tell you that an operation is in progress or has been completed. A message can also prompt you to wait for the completion of an operation.

Detailed descriptions of the Personal Communications messages are available in the online help.

OIA Messages

These messages are displayed in the operator information area (OIA) or in the OS/2 message window. Messages from Personal Communications are displayed in the message window; messages from the host system are displayed in the OIA of the session window.

The bottom line of the session window is the OIA. The OIA indicator indicates the status of Personal Communications as well as information about the workstation, host system, and attachment.

All of the OIA messages are described in the online help. To view this information:

1. Select **Index** from the Help menu.
2. When the help window appears, double-click on **When You Encounter A Problem**.
3. Select choices from the list of hypertext links.

OIA Indicators and Reminders

Control Unit Status (Column 1)
Presence of a character indicates that a session is actively using a control unit. The character indicates the type of control unit attachment. For example:

DFT connection to the host through a 3274 Control Unit

S DFT attachment to the host through a 3174 Control Unit

N DFT attachment to the ES/9370 host

M Attachment to an S/390 host other than those listed above

V Attachment to an AS/400

Attachment Type (Column 2)
The symbol indicates the type of attachment.

The attachment method is non–Systems Network Architecture (SNA).

The attachment method is SNA.

System Available (Column 3)
A symbol indicates whether the workstation is accessing a host or an application.

The workstation is running an application.

The workstation is connected to a host system.

The question mark indicates that the workstation is connected to the host system but is not connected to the application.

Host Shortname (Column 7)
A single character (**a**–**h**) identifies a host session.

Twinaxial (Console) Session Indicator (Columns 4–7)
"LT-1 " indicates a twinaxial (console) 5250 session.

Input Inhibit Indicators

Input Inhibited (Columns 9–17)

This message accompanies the X in column 9 and indicates why input is inhibited.

X More time is required for the host system to perform a function.

X SYSTEM The host system has locked the keyboard. You can either wait for a message to appear or press the Reset key.

X **NUM** You entered a keystroke other than numerics (0–9), a minus sign, a period, a comma, or DUP in the 3270 numeric lock field.

X **nnn** The terminal is not configured correctly or is malfunctioning. The characters nnn represent a value that also appears in the OIA.

X **nnn** The communications link failed or is malfunctioning. The characters nnn represent a value that also appears in the OIA.

X You requested a local copy, but the printer configured for this terminal session is not working. The keyboard locks (keystrokes are queued) while this symbol is displayed.

X

You requested a local copy, but the printer configured for that logical terminal is in use.

X –f You requested a function that is not supported. Press Reset and select a valid function.

X **>** You entered more data in a field than is allowed. Press Reset and correct the entry.

X ?+ You pressed the Response Time Monitor (RTM) key, but the RTM function is not enabled. Press Reset.

X **→** You tried to alter data in a protected field. Press Reset.

X –f **X** You are not authorized to perform this function. Press Reset and try a valid function.

X PROGnnn A program error has occurred. Refer to the online help for more information about Programming Check OIA messages.

X–S You attempted to enter a graphic character that is not available. This character might not be in the Base Character Set. Press Reset and then select a character other than the one that caused the indicator to appear.

X **'+?** You tried to enter a character that is not valid for use in a key sequence. Press Reset and try a valid key sequence.

X **<** All columns are entry fields. Enter data to the end of the field.

X 🧍 ▭ You must enter data in this field.

X II An operator input error occurred.

Communications Reminders

Columns 19–26 provide PC/3270 communication reminders and, when you press the RTM key, the Response Time Monitor indicator.

: The control unit enabled the response time monitor function, but the host system does not allow your workstation to display the response time.

:ss.t The symbol shows the time required for the last data transmission to the host system (ss: seconds, t: tenths of a second).

:mm.ss
The symbol shows the time required for the last data transmission to the host system (mm: minutes, ss: seconds).

:??.? The current response-time measurement was cancelled.

The indicator continues to show each data transmission to the host system until you press the RTM key to cancel this function.

Columns 19–25 provide PC400 communication reminders.

X⚡ **nnn** The communication link connecting your control unit to the host system is producing errors.

Message Waiting Indicator (Columns 26–27)

MW The host system has one or more messages for the 5250 session.

Keyboard and Printer Conditions

Columns 28–80 (columns 35–80 for PC400) display fields that provide information about keyboard and printer conditions.

Transparent Attribute (Columns 28–29)
Displays the transparent attribute in the field at the cursor position or the transparent attribute selected by user.

Finding More Information

In column 28, (a) means opaque, and (✳) means transparent attribute. In column 29, (▶▷) means field attribute inherit, and (🯅) means that you selected a transparent attribute.

Program Symbol (Columns 31–34)
Displays the field character attribute or the program symbol (A–F) selected by user.

In columns 31–33, the character attribute (S0, PSA-F) is displayed. In column 34, the field inherit (▶▷) or user-selected (🯅) is displayed.

Keyboard Shift (Column 36)
Displays an upward arrow (⇧) when you temporarily press the Shift key.

3270 Numeric Lock (Columns 36–38)
When the cursor is in a numeric field and the 3270 numeric lock feature is enabled, **NUM** is displayed.

Caps Lock (Column 37)
Caps Lock is indicated by a capital **A**.

National Language Support (Columns 39-41)
The **NLS** characters indicate that your keyboard is switched to a second keyboard layer. A keyboard layer might be used for other languages, such as:

Arabic
Greek
Hebrew

If the normal keyboard definition table is used, no characters are displayed in columns 39–41.

Extended Color Attribute (Columns 49–50)
Displays the extended color attribute in the field at the cursor position or the extended color attribute selected by user.

In column 49, the color of the selected extended color attribute or field extended color attribute is displayed. In column 50, the field inherit (▶▷) symbol or the user-selected (🯅) symbol is displayed.

Insert Mode (Column 52)
When insert mode is selected, a caret (^) appears in this field. If no ^ is displayed, you cannot insert characters. Instead, entered characters overwrite existing characters.

Printer Status (Columns 61–65)
A Local Copy request is being processed. Printer status indicators can be:

▭—■ nnn
Data is being sent to the indicated printer. A Local Copy request is being processed for this terminal session.

▭—▭ nnn
The printer is ready but not printing. You have printer support. No local copy request is currently pending or being processed.

nnn indicates the printer number (1, 2, 3, or 255) assigned to this terminal session.

Extended Highlighting Attribute
Displays the extended highlighting attribute in the field or the extended highlighting attribute selected by user.

In column 70, (a) means underscore, (a) means reverse, and (a) means other extended highlighting attributes. In column 71, the field inherit (▶▷) symbol or user-selected (人) symbol is displayed.

Cursor Row/Column (Columns 75–80)
The cursor row/column position indicator shows the current cursor screen position.

Personal Communications Library

The Personal Communications library includes the following publications:

Personal Communications Up and Running

Personal Communications Reference

Personal Communications Programmer's Guide

Related Publications

The following table summarizes the Personal Communications publications:

Table 3. Personal Communications Publications for DOS/Windows Mode

Mode	Submode	Publications
Windows	—	*Up and Running for Windows* (SC31-8261) *Reference for Windows* (SC31-8264) *Programmer's Guide for Windows and Full-Function DOS* (SC18-2286)
DOS	Full-function	*Up and Running for DOS (Full-Function Mode)* (SC31-8262) *Reference for DOS (Full-Function Mode)* (SC31-8265) *Programmer's Guide for Windows and Full-Function DOS* (SC18-2286)
	Entry-level	*Up and Running for DOS (Entry-Level Mode)* (SC31-8263) *Programmer's Guide for DOS (Entry-Level Mode)* (SC31-8267)

Contacting IBM

This section lists a number of ways you can reach IBM for various reasons. Depending on the nature of your problem or concern, we will ask you to be prepared to provide us with some information to allow us to serve you better.

If you have a technical problem, please take the time to review and carry out the actions suggested by the online *Personal Communications Reference for Windows*. Use your local support personnel before contacting IBM. Only persons with in-depth knowledge of the problem should contact IBM; therefore, support personnel should act as the interface with IBM.

If you determine that you need to contact IBM, refer to “Statement of Service” for a detailed description of the services IBM provides.

Statement of Service

IBM provides defect support through Program Services. A defect related problem means the program does not conform to specifications and could be either a code or documentation error.

For information on how you may access Program Services, or other fee-based support services, please contact the Project Office at 800-799-7765. Hours of operation are from 8:00 a.m. - 5:00 p.m. Eastern Time, Monday through Friday, except U.S. national holidays.

The terms and conditions for the technical support described in this guide are subject to change.

Reporting Defects

Customers can report code-related problems to IBM electronically, via fax, or through U.S. mail. IBM will respond in the same media as the customer inquiry. IBM will respond to customer inquiries within a maximum of 2 business days of electronic or facsimile receipt, and 7 days of mail receipt advising of the problem disposition.

If the problem reported is not known to be a code-related problem, the customer will be informed that IBM will continue to work on it for a fee if the customer does not have a support contract, or is beyond the “getting started” period. If the problem is determined to be caused by an error in IBM code, the fee will be waived.

Submitting Defects by FAX: To Fax a potential defect to IBM:

1. Call 1-800-992-4777 to have a fax submission form sent to your fax machine. Follow the prompts to select the correct options. Fill out the form and fully describe your problem.
2. Fax the completed defect report to:

   8 -426-86 2

   Be sure to include your Fax number for a response.

Submitting Defects by Mail: To mail a potential defect to IBM:

1. Fully describe your problem
2. Mail the completed defect report to:

   IBM CORPORATION
   PERSONAL SYSTEMS SUPPORT FAMILY
   114 BURNET ROAD
   INTERNAL ZIP 29 1
   AUSTIN, TEXAS 78728

Be sure to include your return address for a response.

Submitting Defects Electronically: IBM will accept potential defect reports submitted using the Internet, TalkLink or Compuserve. Included here for convenience are the steps to access electronic customer support:

TalkLink via IBMLink: The Personal Communications AS/400 and 3270 products are supported via the OS2BBS1 section of the IBMLink service.

1. Access the OS2BBS1 section via an IBMLink Main Menu
2. Select "IBMSupt - IBM PS Defect Submission, CSD Order, & Info Library"
3. Select "PROBrpt - Submit an ETR (Defect Submission)"
4. Select "OTHERProb - PS Supportline - Other IBM Software Products Def. Menu"
5. Select "J-p - PS Supportline - IBM software products J to P Menu"
6. Then select the Personal Communications product in the displayed list (there are various versions and titles displayed, please choose the one that best describes your product)

A temporary reporting number will be displayed at the bottom of the screen. Record this number until a permanent Problem Management Record (PMR) number is assigned to your defect reported.

Also available in the U.S. is access to the PCOMM CFORUM on TalkLink. If you do not have access to TalkLink, call 1-800-547-1283 (U.S.A. only). TalkLink administration personnel will send you a registration package that lists the available features and the current subscription rates. You should receive the registration package approximately two weeks after calling. Return the necessary documents and TalkLink administration personnel will send you a welcome package that contains the software you need to access TalkLink.

Finding More Information

The Internet: In order to submit a software defect report for a Personal Systems Support Family product, go to URL:

http://ps.boulder.ibm.com/www/usa/ps/services

Please note that a customer number and a special personal identification number (PIN) is required to access this service. You can call 1-800-992-4777 to receive your customer number and PIN (tell the customer support representative that you need the customer number and PIN for reporting a defect via the Internet).

This will bring you to the IBM Personal Software Services page. Then choose "Electronic Services". From the Electronic Services page select "Other Electronic Services". On that page, review the section "E-mail Services for Problem Defect Reporting".

IBM Service Home Page:

http://ps.software.ibm.com

Some service fixes and other miscellaneous product information files are located at the following FTP location:

service.boulder.ibm.com/ps/products/pc3270
service.boulder.ibm.com/ps/products/pc400
service.boulder.ibm.com/ps/products/pctlkit
service.boulder.ibm.com/ps/products/nswin
service.boulder.ibm.com/ps/products/anynet

CompuServe: To report a suspected defect in a product in the Personal Systems Support Family via CompuServe:

1. From the CompuServe Main Menu, GO OS2SUPPORT
2. In the Library called "IBM Files" (library 23), download the file PROBLM.TXT.
3. Fill in the appropriate sections of the form contained in PROBLM.TXT (*note: some sections are specific to OS/2 and OS/2 related problems. Please complete the form as completely as possible for your specific operating environment.
4. Using CompuServe E-mail, send this completed form to the address: 76711,611

IBM will reply via CompuServe mail to each PROBLM.TXT defect report received. The reply will include a Problem Management Record (PMR) number. This number is used by IBM to track each unique problem reported by each customer. The IBM reply will also include any other information necessary for the situation.

Other Ways to Contact IBM

Information about Personal Communications is available from the following sources:

The PCOMM CFORUM

This forum is monitored by Personal Communications Development.

- In the U.S., access the PCOMM CFORUM on the OS2BBS bulletin board via TalkLink.

  If you do not have access to TalkLink/OS2BBS, call 1-800-547-1283 (U.S.A. only). TalkLink administration personnel will send you a registration package that lists the available features and the current subscription rates. You should receive the registration package approximately 2 weeks after calling. Return the necessary documents and TalkLink administration personnel will send you a welcome package that contains the software you need to access TalkLink/OS2BBS.

  IBMLink* customers can register via SMARTLink's new TalkLink selection.

- In Canada, access the PCOMM CFORUM via IBMLink.

- In Australia, to access the PCOMM CFORUM:

  1. Type NEWMENU to access the pilot menus.
  2. Select FORUMS.

- In Europe, the Middle East, and Africa, use DIAL-IBM to access the PCOMM CFORUM via the CONFER application on OS2BBS.

  If you do not have access to OS2BBS, contact your country DIAL-IBM help desk.

Internet

IBM Personal Software Services has a home page on the Internet which has general product information as well as service information about APAR fixes. Using an Internet browser, go to the following URL: http://ps.software.ibm.com/www/usa/ps/services/

IBM Networking Software has a home page on the Internet that also has general product information and service information. Using an Internet browser go to the following URL: http://www.raleigh.ibm.com/

IBM Personal Communications Online Customer Support

Access this electronic bulletin board to view information APARs and to obtain APAR fixes. To request that an APAR fix be made available, either leave a message for SYSOP on the bulletin board or call 1-800-992-4777 (U.S.A. only).

Finding More Information

To access the electronic bulletin board:

- Dial 919-543-8200 (country code: 001 from outside the U.S.A.).
- Use protocol N81.
- Follow the instructions. Entering your first name and last name registers you the first time you use the facility.

The IBM Software Solutions Center

From the U.S.A., call 800-992-4777. From Canada, call 800-465-2222. Outside the U.S.A., call IBM International Information at 800-426-1774.

Appendix A. Communication Adapters and Modems

This appendix lists the communication adapters and modems that Personal Communications supports. It also describes how to install the software so you can use a PCMCIA adapter card in your workstation.

Note

Personal Communications will continue to provide support for modems in the marketplace by creating preconfigured modem initialization strings. If your favorite modem is not listed here, select a similar one from the list and try that configuration for your modem. If it doesn't work, call IBM Service to have your modem added to the list of modems supported.

Family-1 Communication Adapters

Personal Communications supports the following communication adapters for workstations with an AT-bus.

- Advanced IBM PC 3278/79 Emulation Adapter (PC/3270 only)
- IBM Enhanced 5250 Display Station Emulation Adapter (PC400 only)
- IBM PC Asynchronous Communications Adapter
- IBM PC AT Serial/Parallel Adapter
- IBM PC Network Adapter
- IBM PC Network Adapter II
- IBM PC Network Adapter II -- Frequency 2
- IBM PC Network Adapter II -- Frequency 3
- IBM PC Network Baseband Adapter
- IBM PC Network Broadband Adapter II
- IBM PC 3278/79 Emulation Adapter (PC/3270 only)
- IBM SDLC Communications Adapter
- IBM Token-Ring Network PC Adapter
- IBM Token-Ring Network PC Adapter II
- IBM Token-Ring Network 16/4 Adapter
- IBM Token-Ring Network 16/4 Trace and Performance Adapter
- IBM Token-Ring Network Trace and Performance Adapter II

© Copyright IBM Corp. 1989, 1996

Adapters and Modems

IBM WaveRunner Digital Internal Modem (ISA)
IBM WindSurfer Communications Adapter (ISA)
IBM 5250 Adapter
Attachmate 3270 Adapter (PC/3270 only)
Attachmate ADVANCE 3270 Adapter (PC/3270 only)
DCA IRMA 3 Convertible 3270 Adapter (PC/3270 only)
Western Digital Ethernet** Plus
3COM Ethernet II

Family-2 Communication Adapters

Personal Communications supports the following communication adapters for workstations with a Micro Channel bus.

IBM Asynchronous/SDLC V.32 Modem/A (MPA card with modem)
IBM Multiprotocol Adapter IV/A
IBM PC Network Adapter II/A
IBM PC Network Adapter II/A -- Frequency 2
IBM PC Network Adapter II/A -- Frequency 3
IBM PC Network Baseband Adapter/A
IBM PC Network Broadband Adapter II/A
IBM PS/2 Ethernet Adapter/A
IBM PS/2 Multiprotocol Adapter/A
IBM PS/2 Dual Asynchronous Communication Adapter/A
IBM S/36/38 Workstation Emulation Adapter/A
IBM Token-Ring Network/A
IBM Token-Ring Network 16/4 Adapter/A
IBM Token-Ring Network 16/4 Trace and Performance Adapter/A
IBM Token-Ring Network Trace and Performance Adapter II/A
IBM Token-Ring Network PS/2 Model P70 386 Adapter II/A
IBM WaveRunner Digital Internal Modem (MCA)
IBM WindSurfer Communication Adapter (MCA)
IBM 3270 Connection (PC/3270 only)
IBM 5250 Emulation Adapter/A
IBM 5250 Adapter/A
Attachmate 3270 Adapter (PC/3270 only)
Attachmate Advance 3270 Adapter/2 (PC/3270 only)
DCA IRMA 3 Convertible 3270 Adapter (PC/3270 only)
Western Digital (SMC) Ethernet Plus/A
3COM Etherlink/MC**

Asynchronous Modems

Personal Communications supports asynchronous modems for Advantis (IIN), IBM Global Network Connection, SNA over Async, and Home3270 connections.

IBM 5841 (1200bps)
IBM 5842 (2400bps)
IBM 5853 (2400bps)
IBM 7855 V.32
IBM ASYNC/SDLC V.32 Modem/A
IBM Internal Data/FAX (2400bps)
IBM High Speed Internal Data/FAX
IBM PCMCIA 2400bps Data (Japan version)
IBM 14.4/14.4 PCMCIA Data/FAX
IBM Push-Pop Modem (Data/Fax 14.4K) (Japan Only)
IBM WaveRunner Digital Internal Modem
IBM WindSurfer 14400 Modem
APEX PCMCIA PCR - 9696
APEX PCMCIA PCR - 1414
ARN DX-MC2
AT&T Paradyne PCMCIA 14.4K Data/Fax for Cellular Mode
AT&T Paradyne PCMCIA 14.4K Data/Fax for Normal Mode
Com1 MC217
Communicate PCMCIA 14400 Fax & Data Modem
Data Race RediCard High Speed PCMCIA Data/Fax modem
Digicom Systems Eagle
Gold Card PCMCIA Modem
Hayes Smartmodem 1200 compatible
Hayes Smartmodem 2400 compatible
Hayes Smartmodem** Ultra 9600
Hayes Smartmodem Ultra 14400
Hayes Smartmodem Optima 9600
Hayes Smartmodem Optima 14400
Hayes Smartmodem Optima 144 for PCMCIA
Hayes Smartmodem Optima 28800
Intel SatisFAXtion 400e
Megahertz PCMCIA XJ1144
Microcom QX/423 bis
MultiTech MultiModem MT1432BLK
MultiTech MultiModem ZDX for Data & Fax
Nokia NMP V32bis Data/Fax PCMCIA Modem
Practical Peripheral PM14400FXSA
Universal Data Systems FasTalk FAX32
US Robotics Courier HST Dual Standards
US Robotics Sportster 14.4 External Modem
US Robotics Courier 28800 External Modem

Zoom V.32 bis
Zyxel U1496E Plus

Asynchronous Modems (Hayes AutoSync)

Personal Communications supports the following Hayes AutoSync-compatible modems.

IBM 14.4/14.4 PCMCIA Data/FAX
APEX PCMCIA PCR - 9696
APEX PCMCIA PCR - 1414
ARN DX-MC2
AT&T Paradyne PCMCIA 14.4K Data/Fax
Com1 MC217
Hayes Ultra 9600
Hayes Ultra 14400
Hayes Optima 9600
Hayes Optima 14400
Hayes Optima 144 for PCMCIA

Synchronous Modems (SDLC)

IBM 7855
Hitachi Hybrid Phone
NEC ITM2400mkII

PCMCIA Communication Adapters

Personal Communications supports the following PCMCIA communication adapters.

IBM Credit Card Adapter for Ethernet
IBM PCMCIA Data/Fax Modem
IBM PCMCIA High Speed Data/Fax Modem
IBM Token-Ring 16/4 Credit Card Adapter
IBM 3270 Emulation Credit Card Adapter (PC/3270 only)
IBM 5250 PCMCIA Adapter Card
Xircom** Credit Card Ethernet Adapter

Twinax Adapters

Personal Communications supports several twinax adapters. For a complete list of all the twinax adapters supported, refer to the README.

Appendix B. Personal Communications Directories and System File Modifications

This appendix describes the directories that are created and how the system files are modified during installation.

Directories Created by the Installation Program

The program creates three subdirectories in the root of the main Personal Communications directory: **PRIVATE, SDK**, and **PDFPDT**. With the exception of the **PRIVATE** subdirectory, the subdirectories might contain files only when you have selected to install them.

PRIVATE Subdirectory

This is almost empty when you first install Personal Communications (unless you have migrated from a previous version), but if you create and save configurations, the following types of files are stored here:

Personal files in the PRIVATE subdirectory:

Workstation (session) profiles (.WS)
Batch files (to start multiple sessions) (.BCH)
Keyboard files (.KMP)
Pop-up keypad files (.PMP)
Mouse files (.MMP)
Macro files (.MAC)
Automatic-dial facility files (.ADU)
File-transfer translation files (.XLT)
User profile (.UPR) (PC400 only)

© Copyright IBM Corp. 1989, 1996

SDK Subdirectory

This has several subdirectories, each containing the executable and source files for a sample program. These programs are designed to illustrate the use of a programming interface:

DDXFER Shows how the EHLLAPI interface can be used to create a Drag-and-Drop application.

LISTFILE Illustrates how the dynamic data exchange (DDE) interface can make use of the **LOAD** button to transfer files from a VM host system (PC/3270 only).

MYPRINT Is a program that uses the DDE interface to provide host file printing from a menu that it adds to the menu bar of the host session (PC/3270 only).

PCSAPI Contains a header file and an import library for developing applications.

SPL2FILE A DDE sample program that converts the AS/400 spooled file to the workstation file.

VBDDE Illustrates the use of the DDE interface with Microsoft Visual Basic**.

VBHLLAPI Illustrates the use of the EHLLAPI interface with Microsoft Visual Basic.

PDFPDT Subdirectory

This directory contains PDF/PDT files used by Personal Communications print function in PDT mode. Refer to Chapter 7, “Printing” on page 41 for more defaults of PDF/PDT files.

Modifying System Files

When Personal Communications is installed, the following system files are modified:

WIN.INI
SYSTEM.INI
PCSWIN.BAT
PCSTSR.BAT

This section explains the information that Personal Communications modifies during installation. It also provides information about which files might be unnecessary after installation so you can delete them if you need more disk space.

WIN.INI File

When Personal Communications is installed, the WIN.INI file is always modified, and the following directory information is added:

```
[PCSWIN]
DIR=drive:\path\
```

The following printer information is also added to the [PrinterPorts] and [devices] sections for the virtual printers function:

```
[PrinterPorts]
 SCS Virtual Printer=PCSVPSCS,LPT1.DOS,15,45,LPT2.DOS,15,45,LPT3.DOS,15,45

[devices]
 SCS Virtual Printer=PCSVPSCS,LPT1.DOS,LPT2.DOS,LPT3.DOS
```

If you do not plan to use the virtual printers function, you can delete this specification.

SYSTEM.INI File

In the SYSTEM.INI file, the following virtual device specification and parameters are added to the [386Enh] section according to your Personal Communications configuration:

VpollD.386

```
[386Enh]

VPollHeapSize=XX
device=drive:\path\VPOLLD.386
```

VpollD.386 is added if one or more of the following conditions are satisfied:

- Either VslanD.386 or VsdlcD.386 is added to the [386Enh] section in the SYSTEM.INI file.
- PCSHAM.EXE or PCSADLC.EXE is added to the PCSTSR.BAT file. (Refer to "PCSTSR.BAT File" on page 103.)
- An SDLC adapter, such as the IBM Multi-protocol adapter, is installed in the system.

This virtual device specification provides the base memory for the virtual device or the DOS TSR programs in the preceding list.

VPollHeapSize specifies the size (in kilobytes) of each buffer that VpollD.386 allocates to the base memory.

The buffer size is calculated as follows:

+12 when PCSHAM.EXE is to be added to PCSTSR.BAT

+15 when you configure an SDLC session

+8 when VslanD.386 is to be added to SYSTEM.INI

+12 when VtdlcD.386 is to be added to SYSTEM.INI

VslanD.386

```
device=drive:\path\VslanD.386
```

VslanD.386 is added only if the IBM LAN Support Program is installed, and the IEEE 802.2 interface is active or if MSDLC is installed.

This virtual device allows the connection to the host system via the IEEE 802.2 interface.

If you will not use the IEEE 802.2 interface, you can delete this specification.

VvlanD.386 (PC/3270 Only)

```
device=drive:\path\VvlanD.386
```

VvlanD.386 is added only if the IBM PC Support Program is installed, and the NetBios interface can be used.

This virtual device allows a connection to a host system via an IBM 3270 Emulation V3 Gateway.

If you will not use such a gateway, you can delete this specification.

VdoshllD.386 (PC/3270 Only)

```
device=drive:\path\VdoshllD.386
```

VdoshllD.386 is always added.

This virtual device specification allows DOS HLLAPI programs to be run from a Windows DOS prompt.

If you will not use such programs, you can delete this specification.

VtdlcD.386

```
device=drive:\path\VtdlcD.386
```

VtdlcD.386 is added only if the following conditions are satisfied:

- A 5250 card, such as the IBM 5250 adapter/A card, is installed in your workstation.
- An OEM (non-IBM) Twinax Virtual Device Driver is installed.

This virtual device allows a connection via the TDLC interface.

If you will not use this interface, you can delete this specification.

VpcsrtrD.386 (PC400 Only)

```
device=drive:\path\Vpcsrtrd.386
```

VpcsrtrD.386 is always added.

This virtual device allows programs that were written for the PC Support/400 router interface to be run from a Windows DOS prompt.

If you will not use such programs, you can delete this specification.

Vint21hD.386 (PC400 Only)

```
device=drive:\path\Vint21hD.386
```

Vint21hD.386 is always added.

This virtual device specification makes the Shared Folders function usable.

If you will not use Shared Folders, you can delete this specification.

VvprtD.386 (PC400 Only)

```
device=drive:\path\VvprtD.386
```

VvprtD.386 is always added.

This virtual device specification makes the virtual printers function usable.

If you do not plan to use the virtual printer function, you can delete this specification.

PCSWIN.BAT File

The PCSWIN.BAT file is created in the directory where Personal Communications is installed.

The content is as follows:

```
drive:\path\PCSLOGO.EXE
call drive:\path\PCSTSR.BAT
windrive:\windirectory\WIN.COM %1 %2 %3 %4 %5 %6 %7 %8 %9
drive:\path\PCSEND.EXE
```

where:

drive:\path represents the drive and the directory where the Personal Communications is installed,

windrive:\windirectory represents the drive and the directory where Windows is installed.

The PCSWIN.BAT file might be used instead of WIN.COM depending on the system configuration.

This file calls PCSTSR.BAT to load the DOS TSR program necessary for the communication, and then starts Windows. After Windows ends, it calls PCSEND.EXE to unload the DOS TSR program.

PCSTSR.BAT File

The PCSTSR.BAT file loads the DOS TSR program necessary for communication. It is created with the lines described in the following sections.

PCSADLC.EXE (PC400 Only)

```
drive:\path\PCSADLC.EXE
```

PCSADLC.EXE is added only if you choose the SNA-over-Async V4.0 attachment (the other SNA-over-Async attachment does not use a TSR program).

If you will not use the SNA-over-Async attachment, you can delete this specification.

PCSHAM.EXE

```
drive:\path\PCSHAM.EXE
```

PCSHAM.EXE is added if you configure a Hayes AutoSync session and allow the system settings to be changed.

If you will not use the Hayes AutoSync attachment, you can delete this specification.

Appendix C. Attachment Considerations

This appendix describes factors you should consider when configuring Personal Communications for the attachment types listed here.

COAX Attachment

This section describes factors you should consider when configuring Personal Communications with a coaxial attachment.

Avoiding Machine Check 207

Patch the microcode of the 3174 control unit. The following table shows the relationship between 3174 control unit microcode levels and patch IDs:

Microcode Level	Patch ID
S0503	PCA53D1
S0504	PCA53D2
A0503	PCA53D3
A0504	PCA53D4
B0200	PCA53D5
B0401	PCA53D6
B0402	PCA53D8
C0101	PCA53D7

Polling Feature

Certain ISA-bus workstations disable interrupt-level 2 (IRQ 9) and reserve it for their own use. IRQ 9, a redirected IRQ 2, is the only interrupt level that can be used by the IBM 3278/79 emulation adapter. Sometimes, when you try to use PC/3270 for coaxial attachment with this type machine, you cannot connect to a host system.

© Copyright IBM Corp. 1989, 1996

If this happens, add the **Poll=Y** parameter to the [CSDFT], [CNDFT], or [CUT] section of your workstation profile (.WS) as follows:

SNA/DFT attachment

```
[CSDFT]
Poll=Y          <-- add
```

Non SNA/DFT attachment

```
[CNDFT]
Poll=Y          <-- add
```

CUT attachment

```
[CUT]
Poll=Y          <-- add
```

Running PC/3270 on a PS/VP with a Coaxial Attachment

The PS/VP system unit uses IRQ 9 for AT applications that use video retrace; IRQ 9 conflicts with the IBM 3278/79 emulation adapter. To use the 3278/79 emulation adapter, remove a jumper (the function of which is "Video Interrupt (IRQ9) enable"), from the system board. The jumper varies according to the model of PS/VP, here are some examples:

PS/VP 6381 /Si 425SX and 433SX : Jumper J23
PS/VP 6381 /Si 433DX and 466DX2 : Jumper J14

Ask your IBM dealer for information about other models.

Also, you can use the PC/3270 Coax Polling feature described on page 105 .

Functions Not Available with CUT Attachment

When the workstation is configured by CUT attachment, the following functions cannot be used:

File transfer
API (DDE,EHLLAPI,SRPI) function
Host graphic function
Edit functions, except for copy and copy append
Host print function

Controller Language for CUT Attachment

Only American English and Austrian/German are supported as the controller language. The controller language can be retrieved by controller customization question number 121.

PCMCIA Configuration for a DFT or CUT Attachment

Using PCMCIA: If your workstation has an IBM 3270 Emulation Credit Card Adapter (3270 CCA) installed, Personal Communications uses it in the same way as the IBM 3278/79 Emulation or 3270 Connection Adapter, but configuration of the card and of the 3270 sessions is more complicated.

To use the 3270 CCA, run PCSMCIA.BAT before you start Windows. This is because the point or card services enabler must be loaded so that it configures the adapter hardware before you start the Windows program.

You cannot use multiple 3270 CCAs; nor can you use a 3270 CCA at the same time as a 3278/79 Emulation or 3270 Connection Adapter.

PCSMCIA.BAT and PCSCCA.EXE: If you choose **Yes** for PCMCIA when you configure a coaxial session, the configuration program will inform you that PCSMCIA.BAT will be created or updated; if it will be in your Personal Communications directory, its purpose is to call PCSCCA.EXE, a program that loads an Enabler for the card.

PCSCCA.EXE detects whether your workstation has the Card Services interface installed. If so, it loads the card services enabler, CS3270.EXE; if not, it loads a point enabler. Three point enablers are provided and are described below; the point enabler that is configured by default is PNT3270.

If CS3270.EXE or PNT3270.EXE is used, you have only to configure the parameters for a DFT or CUT connection and choose **Yes** for PCMCIA. If either of the other enablers is used, you must edit the command in PCSMCIA.BAT so that the correct enabler is loaded.

The command in PCSMCIA.BAT will look something like this:

```
C:\PCOMWIN\PCSCCA.EXE a=  b=ce s=1 PE=PNT
```

For some Toshiba** and Sharp** computers, change the value (PNT) of the last parameter to TOSH or SHRP.

CS3270.EXE is an enabler that uses the card services interface. The others are point enablers that communicate directly with the PCMCIA controller. Once CS3270 has run, it stays in system memory and handles 3270 CCA status changes such as removal and insertion. CS3270 needs about 4 KB of memory and can be loaded in high-address storage.

Once PNT3270.EXE, SHRP3270.EXE, or TOSH3270.EXE has run and has configured the hardware successfully, it is removed from system memory.

As soon as the enabler has configured it successfully, the 3270 CCA can be used in the same way as a full-size adapter.

Attachment Considerations

An enabler assigns system resources to the 3270 CCA as follows:

Shared-RAM range	CE000H – CFFFFH	changeable
Shared-RAM size	8K bytes	fixed
I/O-port range	2D0H – 2DFH	*1
I/O-port size	16 bytes	fixed
Interrupt level	IRQ 9	fixed *2

Notes:

1. *1: CS3270.EXE and PNT3270.EXE can change this range. (6D0H-6DFH, AD0H-ADFH, ED0H-EDFH)
2. *2: IRQ 9 is redirected to IRQ 2.

Which enabler you should use depends on several factors: how much memory you can afford; what interface your workstation provides; what interface your applications can use; and how much flexibility you want.

The CS3270 card services enabler needs the socket services and card services interfaces and remains in memory; these three drivers need 34 KB of memory. However, they can often be loaded in high-address storage.

Card Services has some significant advantages:

You can remove and insert cards without switching off the workstation.

You can put a card into any slot; CS3270 will find and configure it. If you use a point enabler, you must specify the slot number. This means that you must use the same slot each time.

Card Services can manage the use of system resources, thus avoiding conflicts between clients. Point enablers cannot prevent such conflicts; the enabler that is loaded last takes over the resources it needs, even if they are being used by another card.

Card Services Interface: If you want to use the card services interface, the following software must be loaded before CS3270.EXE is executed.

Socket Services (IBMDSSxx.SYS)

xx depends on your workstation type.

Card Services Software (IBMDOSCS.SYS)

Note: Socket Services and Card Services device drivers are shipped with the computer.

This is an example of a CONFIG.SYS file, using IBM DOS 5.02 in the IBM ThinkPad 755.

```
BREAK=ON
BUFFERS=2
FILES=3
LASTDRIVE=Z
FCBS=16,8
 SHELL=C:\DOS\COMMAND.COM /P /E:512
STACKS=9,256
DEVICE=C:\DOS\SETVER.EXE
DEVICE=C:\DOS\HIMEM.SYS
DEVICE=C:\DOS\EMM386.EXE  X=C8  -CFFF
DOS=HIGH
DEVICE=C:\DOS\POWER.EXE
 DEVICE=C:\IBMDSS 1.SYS                    <--- socket services
 DEVICE=C:\IBMDOSCS.SYS                     <--- card services
DEVICE=C:\DICRMU 1.SYS  /MA=C8  -CFFF
DEVICE=C:\$ICPMDOS.SYS
```

With this configuration, PCSMCIA.BAT would load the card services enabler, CS3270.EXE.

Using a Memory Manager with the 3270 CCA: The card services interface itself needs 4 KB of memory as a buffer; this can be anywhere in the range C000–DFFF and the card services device-driver will find a suitable address.

The 3270 CCA needs 8 KB of memory, which can start at any 8 KB boundary in the same range.

Card services and the adapter, therefore, need 12 KB. If you are using a memory manager, exclude a single block at least this size for use by the memory manager itself. For example, its statement in CONFIG.SYS might look like this if you use EMM386 (assuming no expanded memory and the use of the default address, CE00, for the 3270 CCA):

```
DEVICE=C:\DOS\EMM386.EXE NOEMS X=CD  -CFFF
```

Using the 3270 Credit Card Adapter in a ThinkPad 750 Port Replicator

If you use a 3270 Credit Card Adapter in a ThinkPad Port Replicator Model slot, and if PCMCIA Card Services is not installed, you must specify the I/O-port address (3E2) of the PCMCIA controller in the Port Replicator by means of the **PCIC=** optional parameter. Edit PCSMCIA.BAT and add **PCIC= 3E2** to the PCSCCA line as follows:

```
C:\PCSWIN\PCSCCA A=  B=CE S=1 PCIC= 3E2
```

The upper and lower slots of the port replicator are recognized as 1 and 2 respectively; in the example, the 3270 card would be in the upper slot. If card services is installed, the **PCIC** parameter is ignored because card services can automatically detect the I/O-port address.

Using a Xircom Pocket 3270 Adapter

The following restrictions are imposed on the use of the Xircom** Pocket 3270 Adapter:

Only enhanced mode

When using the Xircom Pocket 3270 Adapter with Windows, use the Windows low-level driver (P3DFTVDx.386) supplied by Xircom. This driver requires a 386**- or 486**-based machine, running Windows in enhanced mode.

Supported attachment

Non-SNA DFT attachment and CUT attachment are not supported.

Parameters necessary in the workstation profile

Edit the profile (.WS) and add the following parameters to the **[CSDFT]** section:

```
[CSDFT]
Poll=Y                          <- Added
RTMDisable=Y                     <- Added
```

When the connected control unit is not customized to enable use of the response time monitor (RTM), the **RTMDisable=Y** parameter need not be added.

For details, refer to the *Xircom Pocket 3270 Adapter User's Guide*.

LAN via IEEE 802.2 Attachment

Following is a description of preinstallation considerations for installing PC/3270 for use on a LAN or a gateway. For more detailed information, refer to the *IBM Local Area Network Technical Reference*.

Using a PCMCIA Token-Ring or Ethernet Card

PC/3270 supports the IBM Token-Ring and Ethernet credit card adapters in the same way as it does the full-size adapters. You must install the IBM LAN Support Program V1.3 or MSDLC to provide the interface to the cards and then configure PC/3270 in the usual way.

Using an Ethernet Adapter

This section describes the considerations for using PC/3270 on an Ethernet local area network.

PIU Size: The maximum PIU size allowed for PC/3270 on Ethernet is 1490 bytes. If it is set higher, you get message MACH682 in the operator information area, and the attempt to connect to the gateway fails.

Sharing the LAN Adapter with Other Applications

When you start PC/3270, the emulator opens the LAN adapter that will be used if it is not already open. When the program is stopped, however, the emulator does not close the adapter if another application is using the adapter.

If another application is sharing the LAN adapter with PC/3270, make sure the adapter is opened with parameters that provide resources for both. For example, the DOS LAN Requester and PC/3270 can share the same LAN adapter.

Because an application only has information about the adapter resources that it requires for itself, a method is needed for opening the adapter with cumulative resources for all LAN applications that will share the adapter. One way to do this is to have the NetBIOS device driver of the LAN Support Program, **DXMT MOD.SYS**, open the adapter when the computer is started. The NetBIOS device driver provides a set of optional parameters to configure the driver for other LAN applications.

When the DOS LAN Requester and PC/3270 share a LAN adapter, the ES= (EXTRA.SAPS=) and EST= (EXTRA.STATIONS=) parameters must be specified for **DXMT MOD.SYS**. These two parameters define the resources required for PC/3270 to load successfully. The additional SAPs and link stations are not used by the NetBIOS interface driver and are, therefore, available for use by PC/3270.

NetBIOS Device Driver Parameters: Following are rules for assigning values to the NetBIOS ES= and EST= device driver parameters to support PC/3270.

PC/3270 requires one SAP; therefore, ES= should be set to 1 or greater.

The value of EST= must equal the number of 802.2 host links that will use this LAN adapter.

The following examples show correct **CONFIG.SYS** file parameters for the NetBIOS line for various PC/3270 configurations. It is assumed that each LAN adapter is being shared with a NetBIOS application and that the NetBIOS device driver will open the adapter.

Attachment Considerations

Example	Description
One adapter, one 802.2 host link	This example shows PC/3270 configured with one LAN adapter and a single 802.2 host link. The 802.2 host link equates to the connection between this workstation and a host system; it does not equate to the number of LU sessions running on that link. **DXMA MOD.SYS** is the interrupt arbitrator that is required for all installations. **DXMC MOD.SYS** is the device driver that supports the 802.2 interface for IBM Token-Ring Network adapters. **DEVICE=c:\path\DXMA MOD.SYS** **DEVICE=c:\path\DXMC MOD.SYS** **DEVICE=c:\path\DXMT MOD.SYS ES=1 EST=1**
One adapter, three 802.2 host links	This example shows PC/3270 configured with one LAN adapter and three 802.2 host links. **DEVICE=c:\path\DXMA MOD.SYS** **DEVICE=c:\path\DXMC MOD.SYS** **DEVICE=c:\path\DXMT MOD.SYS ES=1 EST=3**

Using More Than One Host Link

If you want to have concurrent sessions to more than one host system, you must increase the number of 802.2 link stations with which PC/3270 opens its SAP; the default is 1. To do this, increase the link-station count in the configuration for the session (workstation) that will start first. If you will not always start the same session first, you should increase this parameter in the configurations for all your sessions so that you will always have enough resources available.

To change the link-station count:

1. Click **Configure** on the Communication menu in the session window.
2. Select **Configure**.
3. When the Customize Configuration window appears, select **Configure Link**.
4. Select **Advanced** and then change the Link Station Count.

If your LAN Support Program configuration includes DXMT0MOD.SYS, make sure that the EST parameter value is high enough (1 for each link).

LAN via IPX/SPX (NetWare for SAA) Attachment

You can have 3270 sessions on an IPX/SPX network through a NetWare for SAA Gateway.

DOS IPX/SPX Protocol Driver

You must have an active IPX/SPX link to the server, which is usually provided by LSL.COM and IPXODI.COM.

If your workstation is on a token-ring network and the server is on the other side of a bridge, you must load ROUTE.COM.

When running the PC/3270 LAN via IPX/SPX connection, you do not need to load the NetWare shell (NETX, for example); but you can do so if you want to use the server to share files or printers.

You must set up your Windows environment for the Novell network, and install NWIPXSPX.DLL (provided by Novell) in your windows directory. For more information, refer to “Setting Up Windows for LAN-via-NetWare-for-SAA Attachment” in the online help.

Restrictions

The following functions are not available with this connectivity.

SDDLU (self-defining dependent LUs)
SNA session-level compression and decompression

FMH1 and LU 1 Printer

FMH1 is not supported for this attachment. This means that the printer session might not work correctly, if you have an LU 1 printer session and if the host application sends an FMH1 to PC/3270.

TCP/IP Connection

This section provides information, considerations, and restrictions for Personal Communications TCP/IP connections.

Supported TCP/IP Stack Programs

In addition to IBM TCP/IP for DOS V2.1, some other TCP/IP stack programs are supported with Personal Communications:

FTP Software, Inc. PC/TCP Network Software for DOS V2.3

NetManage, Inc. Chameleon NEWT TCP/IP for Windows V3.1 (with the restriction that the Chameleon NFS cannot be used)

Novell, Inc. LAN WorkPlace** for DOS V4.1

Trumpet Software International Pty Ltd. Trumpet Winsock 2.1

Microsoft Corporation TCP/IP-32 V3.11b

Other products that provide a Winsock V1.1 interface might also work.

Restrictions

The following functions are not available with this connectivity.

- SDDLU (self-defining dependent LUs)
- SNA session-level compression and decompression
- LU type 1 host-directed printing using FMH1 (TN3287 printing, as defined in RFC 1646, is supported)
- The maximum packet size must be less than 8000 bytes for file transfer.

Screen Size

The following four screen sizes are supported:

24 x 80
32 x 80
43 x 80
27 x 132

Terminal Type to Be Negotiated

The terminal type to be negotiated is set to IBM-3278-2-E, IBM-3278-3-E, IBM-3278-4-E, or IBM3278-5-E according to the screen size that is specified on the Customize Communication - 3270 Host panel. If you need to specify IBM-3279-2-E or IBM-3279-3-E (for graphics), add the following line to the [Telnet3270] section in the workstation profile (.WS):

```
TerminalType=3279
```

Windows NT SNA Client

Restrictions

The SNA Server response time monitor (RTM) feature is not supported.

SDLC Attachment

This section describes factors you should consider when configuring Personal Communications with an SDLC attachment.

Windows 386-Enhanced Mode

When a device driver or TSR program that uses either IRQ3 or IRQ4 starts before Windows and you open a DOS box after starting Personal Communications, Personal Communications might stop because it cannot detect the interrupt level.

The IBM SDLC adapter uses interrupt-level 3 (IRQ3) and interrupt-level 4 (IRQ4) to control the hardware. If you use Windows in enhanced mode, the virtual machine manager controls the interrupt level as GLOBAL or LOCAL, depending on the state of the interrupt controller interrupt mask register (IMR) at Windows startup.

If you must use a device driver or TSR program that uses IRQ3 or IRQ4 from a DOS box, run PCSSDLC.EXE from the DOS command prompt, before starting Windows to install the SDLC protocol handler as a TSR.

Saving Memory

When you perform two SDLC attachments using two adapter cards, PCSSDLC.EXE sets the default so that two instances (DATA and STACK) can be provided for the SDLC protocol machine to avoid confusion between those adapter cards.

If you always use SDLC attachment with only one adapter card, follow the procedure below. You can reduce base memory (up to 640 KB) usage by approximately 1,250 bytes.

Attachment Considerations

When you install the PCSSDLC.EXE module as a TSR program before starting Windows, add a parameter to PCSSDLC.EXE.

If you use PCSWIN.BAT to load PCSSDLC.EXE, change PCSTSR.BAT as follows:

```
PCSSDLC.EXE    /n=1
```

If you do not install PCSSDLC.EXE before starting Windows, add the following parameter to the [SDLC] section of the workstation profile (.WS):

```
[SDLC]
NumOfInstances=1                <- Added

        OR

[SDLC525 ]
NumOfInstances=1                <- Added
```

Line Speed

For the SDLC attachment, a line speed up to 19.2 Kbps is supported. However, actual line speed will vary depending on the carrier speed the modem supports. If an SDLC attachment fails at the specified line speed, reduce it.

Performance Considerations

With SDLC attachment, if you use multiple sessions in a high-speed and high-load configuration, or if you open a DOS box under these conditions, the connection to the host might fail. In this case, specify host or Personal Communications timeout values such that the host's timeout value is greater than that of Personal Communications.

To change the host timeout value, modify the following NCP parameters:

REPLYTO
: The maximum duration in seconds that the host waits for a reply from the terminal. The default is 1 second.

RETRIES=(m,t,n)
: The number of attempts to be made to recover from errors occurring during transmission over the link. Repetitive retries are called a retry sequence. The maximum number of retries is specified as m, which can be from 0 to 128. NCP pause (the time between the retry sequences) is specified as t and can be from 1 to 255 seconds. The maximum number of retry sequences is specified by n and can be from 1 to 127.

For example:

```
REPLYTO=1,  RETRIES=(3,4,5)
 (( 1(seconds) x 3(times) + 4(seconds)) x 5(times)
 = 35 (seconds)
```

Note: In this example, the host will wait 35 seconds for the terminal to reply.

For more details, ask your system personnel.

Change the Timeout value in the [SDLC] section of your workstation profile (.WS) as follows:

```
[SDLC]
   :
TimeOut=15     <<-- change
```

The value is in seconds and can be from 1 to 3 . The default is 3 .

Interrupt Conflict between SDLC Adapter and COM2

The IBM Multi-Protocol Adapters (MPAs) and the AT-bus SDLC Adapter use interrupt-level 3 (IRQ3) and cannot be changed. COM2 also uses interrupt-level 3 (IRQ3) by default. In this case, you cannot use a Personal Communications SDLC connection and a Windows application that uses COM2 (for example, TERMINAL.EXE) at the same time. If you do, an IRQ3 conflict results.

Advantis (IIN) Attachment

Advantis (IIN) supports only a single adapter, and you cannot use other connections at the same time.

Line Speed

Line speeds up to 19,200 bps can be used with Personal Communications on many workstations when other applications are not running simultaneously. However, the maximum line speed depends on the performance of your workstation and the serial port driver. This is applicable to all the Personal Communications asynchronous attachment types.

Modem Configuration

The Series/1 gateway has the following restrictions:

Error correction is not supported.

V.25, V.32bis, V.42, and V.42bis functions will NOT work. These are sometimes your modem's defaults; if so, you must turn them off.

Hardware and software flow control must be disabled.

V.32 is required for 9600 bps transmission.

Device Conflict

If you open a DOS box during communication by the ASYNC attachment, a conflict might occur between the communication port device and COMMAND.COM, and communication might stop. In this case, add the following parameters to the [386Enh] section of the SYSTEM.INI file:

```
[386Enh]
COM1AutoAssign=-1          <- Added
COM2AutoAssign=-1          <- Added
```

With these parameters specified, Windows indicates to which application the port control is to be transferred when it detects a communication port device conflict. Then, control must not be transferred to COMMAND.COM. For details, refer to Windows SYSINI2.TXT.

IBM Global Network Connection Attachment

The following functions are not available for IBM Global Network attachments:

Type LU 1/3 host-directed printing
Host Graphics

Home3270 Attachment

Home3270 supports only a single adapter, and you cannot use other connections at the same time.

Line Speed

Line speeds up to 19,200 bps can be used with PC/3270 on many workstations when other applications are not running simultaneously. However, the maximum line speed depends on the performance of your workstation and the serial port driver. This is applicable to all the Personal Communications asynchronous attachment types.

Unsupported Character Sequences

The following character sequence is valid for the Home3270 attachment. However, it performs no function.

ESC P 1 (Block cursor command)
ESC P 0 (Underline cursor command)
DLE DC2 (Printer start command)
DLE DC4 (Printer end command)

Conditions for Communication Check 50x

Home3270 requires both Data Set Ready (DSR) and Carrier Detect (CD) to determine the state of the attachment with the host system. If DSR is not recognized, communication check 501 appears in the operator information area. When DSR is recognized, if CD is not recognized, communication check 504 appears in the operator information area.

When you select ROLMphone** with DCM in the Home3270 configuration, communication check 504 does not appear.

APPC3270 Attachment

Host system requirements: The APPC3270 server function is provided by the APPC Application Suite (MVS/ESA or VM/ESA) or by an optional feature of VTAM V4R2 (MVS/ESA). MVS/ESA must be V4R2 or later. VM/ESA must be V1R2 or later.

AnyNet Attachment

PC/3270 requires an IBM Communications Server gateway, configured for AnyNet, to provide the connection to the host system. PC400 can connect directly to an AS/400 that is configured for AnyNet.

3270 Attachment via the AS/400 System

This section provides information, considerations, and restrictions for PC/3270 connections through an AS/400 system.

AS/400 System Setup

PC/3270 can connect to a host computer via one or more AS/400 systems by using the passthru function (usable with OS/400 Version 2.2.0 or later) supplied through an AS/400 system.

To use this function, set the following communication configuration descriptions in the AS/400 system to **on** (Vary On):

Line description
Controller description
Printer description

Error Messages from the AS/400 System

When this system is connected to an S/390 host system via the AS/400 system, the following message might appear on the screen.

AS/4 CPI5xxx

The message might appear for the following reasons:

Line error between the AS/400 system and the host system

Communication configuration description error in the AS/400 system

The communication configuration description in the AS/400 system is set off (Vary Off).

When this message appears, detailed error information is saved in the AS/400 system operator message queue. Refer to the error message that corresponds to the number displayed on the screen and then correct the cause of the error.

SNA Considerations

This section describes factors you should consider when configuring Personal Communications for use with SNA applications.

SDDLU

PC/3270 supports the self-defining dependent logical units (SDDLU) function of ACF/VTAM Version 3 Release 4.1 (MVS) or Version 3 Release 4 (VM). SDDLU provides the ability to dynamically create dependent LUs on predefined PUs and to reconfigure dependent LUs without interruption to any other user on the network and without intervention by system programming or operations staff.

PC/3270 SDDLU is supported for all connections except DFT (coaxial connection).

PC/3270 network stations support SDDLU by:

Accepting a format-1 Activate PU (ACTPU), which signals that VTAM requires a Network Management Vector Transport (NMVT) containing the Product Set ID (PSID) and LOCADDR of the LU.

A PC/3270 network station will use LOCADDRs 02, 03, 04, and so on, in that sequence, by default. However, if you specify the LU addresses explicitly, it will use the addresses that you specify.

Sending an unsolicited NMVT to VTAM when an LU switches on.

Attachment Considerations

PSID Definitions: PC/3270 defines the default PSID for each LU type. Generally, the PSID contains such things as the machine type and the model number. The following table describes the machine type and model number definitions for each LU type supported by PC/3270.

Machine Type	Model Number	LU Type	Screen/Buffer Size
3270	002	Display Model 2 screen	24 rows by 80 columns
3270	003	Display Model 3 screen	32 rows by 80 columns
3270	004	Display Model 4 screen	43 rows by 80 columns
3270	005	Display Model 5 screen	27 rows by 132 columns
3270	DS2*	Printer 3270 data stream	24 rows by 80 columns
3270	DS3*	Printer 3270 data stream	32 rows by 80 columns
3270	DS4*	Printer 3270 data stream	43 rows by 80 columns
3270	DS5*	Printer 3270 data stream	27 rows by 132 columns
3270	00A	Display	48 rows by 80 columns
3270	00B	Display	62 rows by 160 columns
3270	00C	Display	24 rows by 132 columns

* PC/3270 assumes that 3270 data stream is the default printer-session type. If you use the SNA Character String (SCS) data stream, you must use a different designation for the PSID, such as 3270SCS. You must define this yourself, as shown in the next example.

Assigning User-Defined PSIDs: You can replace the default PSID values with your own definitions or define new PSIDs, by preparing a PSID definition file or by changing the Windows workstation profile. The PSIDs you use must be defined to VTAM.

Add a statement such as the following one to the [LU] definition in the workstation profile. This example supersedes the default PSID with LUA0001. PSID = LUA 1

Twinaxial Attachment (Console)

Use the twinaxial attachment only when your workstation is used as an AS/400 console. Do not attempt to use this feature when your workstation is being used as a stand-alone unit.

5250 Data Stream

The extended 5250 data stream for using the extended user interface, the Enhanced Non-programmable Terminal User Interface (ENPTUI), cannot be transferred from the host system.

Restrictions

You cannot use the **Setup API** functions of the File menu.

When you use twinaxial attachment (Console), you can only use **Copy** of the Edit functions.

You cannot use the file transfer function.

You cannot set the session type to **Printer**.

You cannot use multiple console sessions.

Asynchronous Console

For the asynchronous console attachment, you must have a 2609 or 2612 adapter for the Multiple Function I/O Processor (MFIOP) on the AS/400 system. This connection also requires a special cable. The part numbers for the cables are: 46G0450 (6m) and 46G0479 (2.5m).

Note: The AS/400 Advanced Portable Model P02 does not support the asynchronous console attachment.

Appendix D. PC400 Setup Hints and Tips

This appendix contains information for configuring PC400, including how to set up PCMCIA and Twinax adapter cards and how to configure a NetWare for SAA attachment.

Setting Up a 5250 Emulation PCMCIA Adapter

Personal Communications supports TDLC attachment through the IBM 5250 Emulation PCMCIA card. Before you can use the card, you must install and load an Enabler that is provided with it.

Installing an Enabler for the IBM 5250 Emulation PCMCIA Adapter

The Enabler/Diagnostics diskette that comes with the card includes the files necessary to enable it; the CFG5250.EXE program (which is called by SETUP.BAT) configures CFG5250.DAT, which will be used to initialize the card.

1. Insert the diskette into drive A.
2. At the DOS prompt, type:

   ```
   a:setup C:\ENB525
   ```

   where C:\ENB525 is the drive and path in which you want to install the files.

   A window appears with one option, **Card Services**.
3. If you are using PCMCIA Card Services, press F10 to save the configuration and then F3 to exit.

© Copyright IBM Corp. 1989, 1996

If you are **not** using Card Services, press the spacebar; a window appears with the following options:

```
PCMCIA Support:      IBM ThinkPad, INTEL 82365 PCIC, Sharp PHIC, ...etc.
Socket:              1 or 2
Interrupt Level:     5,4,3,6,7
I/O Port:            118- 11F, 218- 21F, 318- 311F, 418- 41F,2718-271F,
                     2418-241F,2518-251F,2618-261F
Memory:              CC -CDFF,C -C1FF,C4 -C5FF,C8 -C9FF,D -D1FF,
                     D4 -D5FF,D8 -D9FF,DC -DDFF
```

4. Make your choices. Note that the IBM ThinkPad option applies only to the ThinkPad 720; for all other types, you should choose INTEL 82365.

   When you configure Personal Communications, you must set the Interrupt Level, I/O Port and Memory to correspond with those that you configure for the card.

5. Press F10 to save the configuration and then press F3 to exit the program.

   A message appears to tell you that you need to do the following:

   a. Add `set enb525 =]d[:\[path]` to your AUTOEXEC.BAT file.
   b. Add `device=]d[:\[path\csdd525 .sys]` to your CONFIG.SYS file.

6. After you make these changes, you must restart your workstation before you can use the card.

If you want to change the card's configuration at any time, run CFG5250.EXE.

Enabling the 5250 PCMCIA Card

Before you can use the Twinaxial attachment, you must enable the 5250 PCMCIA card, and you must do this **before you start Windows**.

To enable the 5250 PCMCIA card, type:

```
[d]:\[path]\enb525
```

ENB5250.EXE enables the card with its settings in CFG5250.DAT.

If the card is installed and its configuration is correct, a message appears that shows the configuration values used and tells you that the card was enabled.

Memory Address Considerations

You will probably use EMM386 (or something similar) to manage the memory in your workstation. If you do, you must reserve the area that will be used by the 5250 card, by adding the X=yyyy-yyyy option to the memory-manager statement in CONFIG.SYS as shown in the following section.

CONFIG.SYS Example

Here is an example of a CONFIG.SYS that loads Card Services; if you are using a Point Enabler, you must not include the statements marked **.

Please note that CSDD525 .SYS is required whether you use a point enabler or the Card Services enabler; in the latter case, it must be added after the card and socket services device-drivers.

The card needs 8kb of memory. In the example, it will be using the address DC00-DDFF and there will be space above that for the 4kb that Card Services needs. If you were to use a point enabler, you could reduce the area excluded to 8kb total.

```
BUFFERS=2
FILES=2
DOS=HIGH,UMB
COUNTRY= 81,932,C:\DOS\COUNTRY.SYS
SHELL=C:\DOS\COMMAND.COM /P /E:512
DEVICE=C:\DOS\$FONT.SYS
rem ========== Set environment variable for the 525  card ========
SET ENB525 =C:\ENB525
REM ============================================================
DEVICE=C:\WINDOWS\HIMEM.SYS
DEVICE=C:\WINDOWS\EMM386.EXE 512 X=DC  -DFFF
rem ========== IBM Socket & Card Services =========
DEVICE=C:\PCMCIA\IBMDSS 1.SYS /S =2
DEVICE=C:\PCMCIA\IBMDOSCS.SYS
DEVICE=C:\PCMCIA\DICRMU 1.SYS /MA=DC  -DFFF
DEVICE=C:\PCMCIA\$ICPMDOS.SYS
rem ========== Phoenix Socket Services & Card Services =====
rem DEVICE=C:\DOS\PCMSS.EXE /APOFF
rem DEVICE=C:\DOS\PCMCS.EXE /WAIT=12 /ADDR=DC /IRQ=1  /NOPM
rem ========== 525  device driver ==================
DEVICE=C:\ENB525 \CSDD525 .SYS
=====================================================
DEVICE=C:\DOS\SETVER.EXE
DEVICE=C:\DOS\$PRNUSER.SYS
DEVICE=C:\WINDOWS\SMARTDRV.SYS 2 48
DEVICE=C:\DOS\RAMDRIVE.SYS 8448 /E
DEVICE=C:\ICSDLCA.SYS /S /B
STACKS=9,256
```

Twinax Card Configuration in PC400

You must also configure the twinax card through PC400 configuration:

1. Start Windows
2. If error messages display about the twinax adapter, ignore them.

   Due to an I/O address conflict, your workstation might hang during initialization of Windows. If the problem occurs, remove VTDLCD.386 temporarily from 386ENH section of SYSTEM.INI.
3. Click the **Start/Configure** session icon.

4 Configure the session parameters, then click **Configure Link**.

5 Configure the basic link parameters, then click **Advanced**.

6 Select the I/O address, memory address, and interrupt request (IRQ).

If you are using a point enabler, the memory address and IRQ must be the same as you configured for the card.

7 Click **OK** to save information into PCSTDLC.DAT.

8 Click **OK** until all the PC400 windows close.

9 Exit Windows.

Setting Up a Token-ring PCMCIA Adapter

The LAN-via-IEEE-802.2 attachments of Personal Communications need to have the IEEE 802.2 interface available when you start a session. You will probably use the IBM LAN Support Program (LSP) if you have an IBM adapter, so the advice in this section is given on that basis.

You can configure LSP in either of two modes - Native or NDIS; with the introduction of the Auto 16/4 Credit Card Adapter, there are two types of Native support, and both will be described. In the sample CONFIG.SYS files, the Netbios device-driver, DXMT0MOD.SYS has been included; this is not necessary for the IEEE 802.2 attachment but you may need it so that you can use Netbios to a LAN server.

Native Mode with DXMC0MOD.SYS to provide the IEEE 802.2 protocol

This is the mode that has been commonly used for many years; it requires two device-drivers, as shown in the example, though you can add a third if you want the Netbios protocol as well as IEEE 802.2.

To use this mode with a PCMCIA card, you need an enabler; two types are provided - a Card Services enabler, CS20TOK.SYS, if you are using Socket and Card Services, or a Point Enabler, POINTTR.SYS, if you are not.

Here is part of a typical CONFIG.SYS: It provides 24kb of memory for the MMIO and Shared-RAM buffers of the card, plus 4kb for Card Services itself. Note that the memory range reserved by EMM386 must be at least as large as that configured for

the Resource Map Utility, DICRMU01.SYS, and that the SRAM address must be the same for CS20TOK and DXMC0MOD.

If you use a Point Enabler, you must not load any of the five device-drivers marked **. The same considerations apply as regards memory management.

```
rem ============    This statement loads the Point Enabler    ==============
rem DEVICE=C:\TRNCCA\POINTTR.SYS S=A SRAM=DC  ,16 MMIO=DA   IRQ=9 RS=16
=========================================================================
DEVICE=C:\DOS\HIMEM.SYS

DOS=HIGH,UMB
FILES=3
BUFFERS=1
STACKS=9,256

DEVICE=C:\DOS\EMM386.EXE NOEMS X=D9  -DFFF

DEVICEHIGH=C:\THINKPAD\IBMDSS 1.SYS
DEVICEHIGH=C:\THINKPAD\IBMDOSCS.SYS
DEVICE=C:\THINKPAD\DICRMU 1.SYS /MA=D9  -DFFF
DEVICE=C:\THINKPAD\$ICPMDOS.SYS

DEVICE=C:\CS2 TOK.SYS RS=16 PROMPT MMIO=DA   IRQ=9 SRAM=DC  ,16
DEVICEHIGH=C:\LSP138\DXMA MOD.SYS   1
DEVICEHIGH=C:\LSP138\DXMC MOD.SYS N 4    44634D6,DC  , ,2,4
DEVICEHIGH=C:\LSP138\DXMT MOD.SYS    ST=3 ES=2 EST=6 O=Y CF=YES C=2
```

Native Mode with DXMCSMOD.SYS to provide the IEEE 802.2 protocol

DXMCSMOD.SYS is a Card-Services-aware version of DXMC0MOD; an enabler is not necessary. DXMCSMOD uses a parameter file called LSP.INI, which is similar to the PROTOCOL.INI file that is used in the NDIS environment. The same considerations apply as regards memory management.

```
DEVICE=C:\DOS\HIMEM.SYS

DOS=HIGH,UMB
FILES=3
BUFFERS=1
STACKS=9,256

DEVICE=C:\DOS\EMM386.EXE NOEMS X=D9  -DFFF

DEVICEHIGH=C:\THINKPAD\IBMDSS 1.SYS
DEVICEHIGH=C:\THINKPAD\IBMDOSCS.SYS
DEVICE=C:\THINKPAD\DICRMU 1.SYS /MA=D9  -DFFF
DEVICE=C:\THINKPAD\$ICPMDOS.SYS

DEVICEHIGH=C:\LSP138\DXMA MOD.SYS   1
DEVICEHIGH=C:\LSP138\DXMCSMOD.SYS
DEVICEHIGH=C:\LSP138\DXMT MOD.SYS    ST=3 ES=2 EST=6 O=Y CF=YES C=2
```

NDIS Mode with DXME0MOD.SYS to provide the IEEE 802.2 protocol

PCOM does not require you to use NDIS mode but you may need to because another program, such as TCP/IP, does require it. NDIS mode uses more memory than either of the Native modes.

The Token-ring device-driver, IBMTOKCS.DOS, is Card Services aware, so an enabler is not necessary. It can also be used with a Point Enabler, as shown.

Note that, for Personal Communications you should increase the work-space provided for the DXME0MOD driver from its default, 8, to 12 (or more if you have a large number of sessions).

```
rem ============    This statement loads the Point Enabler    ==============
rem DEVICE=C:\TRNCCA\POINTTR.SYS S=A SRAM=DC  ,16 MMIO=DA   IRQ=9 RS=16
=========================================================================
DEVICE=C:\DOS\HIMEM.SYS

DOS=HIGH,UMB
FILES=3
BUFFERS=1
STACKS=9,256

DEVICE=C:\DOS\EMM386.EXE NOEMS X=D9  -DFFF

DEVICEHIGH=C:\THINKPAD\IBMDSS 1.SYS
DEVICEHIGH=C:\THINKPAD\IBMDOSCS.SYS
DEVICE=C:\THINKPAD\DICRMU 1.SYS /MA=D9  -DFFF
DEVICE=C:\THINKPAD\$ICPMDOS.SYS

DEVICE=C:\LSP138\PROTMAN.DOS /I:C:\LSP138
DEVICE=C:\LSP138\IBMTOKCS.DOS
DEVICE=C:\LSP138\DXMA MOD.SYS   1
DEVICEHIGH=C:\LSP138\DXME MOD.SYS N 4    44634D6,12, ,1,1
DEVICE=C:\LSP138\DXMT MOD.SYS    ST=3 ES=2 EST=4 O=N CF=YES C=2
```

NetWare for SAA Setup

PC400 supports connections to an AS/400 via a Novell NetWare for SAA Gateway (with the use of the PC Support/400 Router). After you create the configuration, as described below, you can connect to your AS/400 system with a display or printer session.

1. Install PC Support/400.

   In this case, the most important thing is the selection of the host connection type. If the NetWare server is connected to the AS/400 via SDLC, the SDLC connection should be selected on the customization screen, even if the physical

connection between the NetWare server and the customers' client is Token Ring. The following is a sample of the connection types:

```
      AS/4   <-------> NetWare Server <-----------> PC
Connection : SDLC
             SDLC                          Token  Ring

      AS/4   <-------> NetWare Server <-----------> PC
Connection : Token Ring
         Token  Ring                       Ethernet
```

Basically, Microsoft Windows is supported by the Extended DOS version of PC Support. In this case, the most important files of PC Support/400 are: RTRMAP.EXE, EHNAPPC.DLL and EHNRTRW.DLL. EHNAPPC.DLL and EHNRTRW.DLL are prepared for the Router API for Windows. The NetWare router does not have this interface to PCSXI (DOS Extender) which is packaged in PC Support/400 Extended DOS version. So, RTRMAP.EXE is required to inform the DOS Extender that an OEM router is installed. The above three modules in the old version of OS/400 have some errors in them. Many PTFs are released on the above components, so verify that the latest PTF's are installed. Again, RTRMAP.EXE is the most key program and should be used at the latest version.

2 Copy the NetWare router and some associated files from the NetWare server. (Those are stored in the directory of 'SYS:\SYSTEM\NWSAA\AS400'. You will be able to find STRNRTR.EXE, RMVNRTR.EXE,....)

3 Edit the STARTPCS.BAT as follows:

a Replace STRTRTR which is originally packaged in PC Support, to STRNRTR which is packaged in NetWare.

b Add RTRMAP in front of :ESRTR label.

So you can see the following statements in the STARTPCS.BAT.

```
PCSXI %1
:EDOSX
    :
    :
:SSRTR
STRNRTR %1                          <----- Changed from
STARTRTR
ECHO OFF
IF ERRORLEVEL 2  GOTO EXIT
ECHO ON
RTRMAP                               <----- Add
ECHO OFF                            <----- Add
IF ERRORLEVEL 2  GOTO EXIT           <----- Add
ECHO ON                             <----- Add
:ESRTR
:SWIN
PCSWIN /B=16
ECHO OFF
    :
    :
```

Hints and Tips

4 Add the NetWare server name to the CONFIG.PCS, as follows:

```
CSNA NWSAA              <-----   Add   (NWSAA - Server Name)
SFLR 1,I,,OL1
        :
        :
```

5 To get a display session, select **PC Support/400 Router** connection from the Configure Communications - 5250 Host window.

Appendix E. AS/400 Configuration Examples

To connect PC400 to an AS/400 system, you need to specify configuration information in the workstation profile that accurately corresponds to the information specified in the AS/400 system (referred to as the *device description*).

For example, the LAN attachment via IEEE 802.2 in the following figure shows how the configuration information specified in the PC400 workstation profile corresponds to the configuration information in the AS/400 system.

© Copyright IBM Corp. 1989, 1996

Configuration Examples

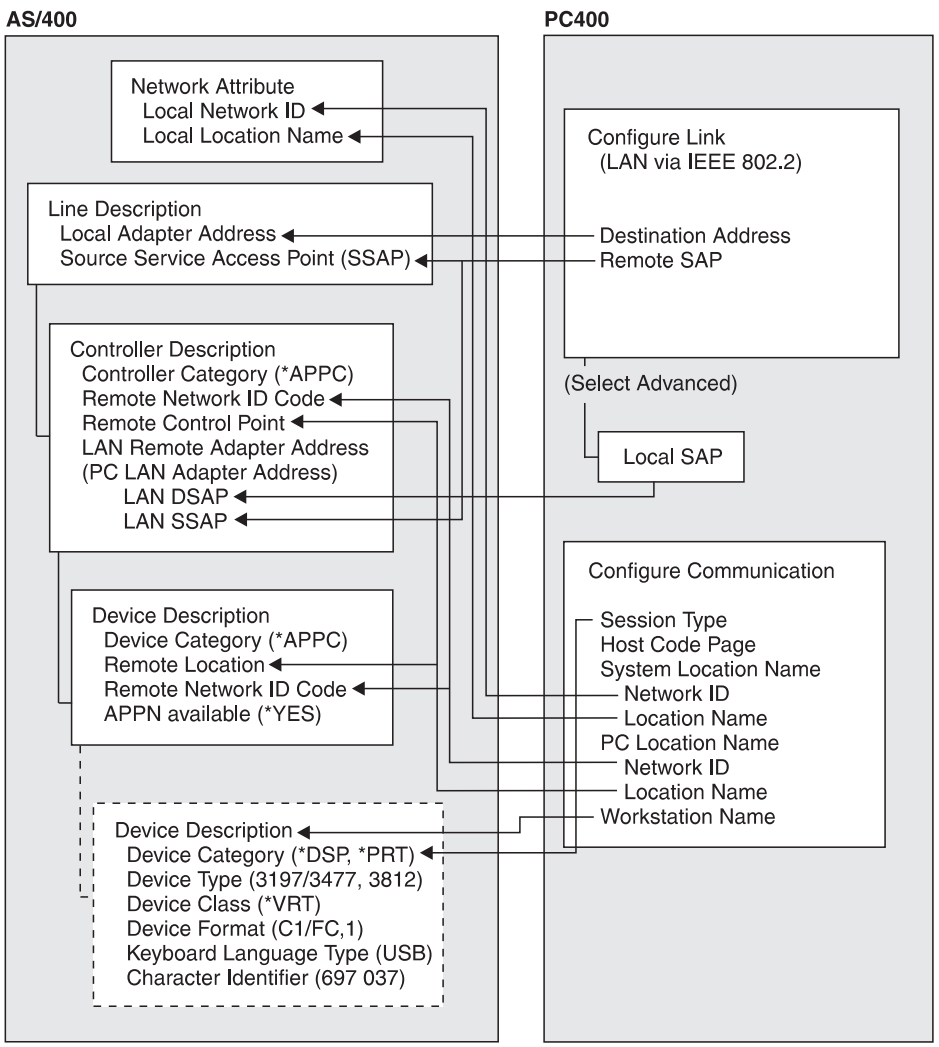

AS/400 Device Description

To configure 5250 display or printer sessions, the following values must be set in the AS/400 device description:

AS/400 Device Description	Display Session		Printer Session
	24 x 80	27 x 132	
Device category	*DSP	*DSP	*PRT
Device class	*VRT	*VRT	*VRT
Device type	3197	3477	3812
Device model	C1	FC	1
Keyboard language type	USB+	USB+	-
Character identify code	697 037+	697 037+	-
+ Depends on the host code page selection.			

5250 Sessions through One Link

If you want all your 5250 sessions to connect through one link to an AS/400 system, use the same **PC Location Name** and the same **Link Parameters** for all the sessions.

For example, you can configure two display sessions and one printer session connected to an AS/400 system using *APPN.PC5250* as the **Location Name**.

```
Session A    : Session Type            : Display
(Display)      System Location Name    :  APPN.S78 1234
                 PC Location Name      :   APPN.PC525
                 Workstation ID        :  (not specified)

Session B    : Session Type            : Display
(Display)      System Location Name    :  APPN.S78 1234
                 PC Location Name      :   APPN.PC525
                 Workstation ID        :  (not specified)

Session C    : Session Type            : Printer
(Printer)      System Location Name    :  APPN.S78 1234
                 PC Location Name      :   APPN.PC525
                 Workstation ID        :  PCLOCALP1
```

In this example, the AS/400 network attributes are:

```
Local network ID : APPN
Local location   : S78 1234
```

Note

Enter **DSPNETA** from a 5250 session to display AS/400 network attributes.

AS/400 System Mode Description

PC400 initially uses mode description **QPCSUPP** on the AS/400 system. If the PC Support/400 program or Client Access/400 is installed on the AS/400 system, QPCSUPP need not be created. If mode description QPCSUPP does not exist on the AS/400 system, create the mode description:

1 Enter the following command on the command line of the main menu of the AS/400 system:

CRTMODD

The Creating Mode Description panel appears.

```
                    Creating Mode Description (CRTMOD )

Type the selected items, and push the Enter key.

Mode Description................                  Name
Maximum Session................. 8          _______          1-512
Maximum number of interaction.... 8          _______          1-512
Number of Local Control Sessions. 4          _______          -512
Number of Pre-joined Sessions....            _______          -512
Inbound Pacing Value............. 7          _______          -63
Outbound Pacing Value............ 7          _______          -63
Maximum Length of Request Unit...  CALC      _______          241-16384,  CALC
Text Description ................  BLANK     ____________________________________

                                                                                 End
F3=Exit      F4=Prompt            F5=Reshow      F1 =Add parameter     F12= Cancel
F13=How to use this panel                    F24=More key
```

2 Type the necessary values in each field, according to the following table.

Field Name	Input Value
Mode description	**QPCSUPP**
Maximum session	**64**
Maximum number of interactions	**64**
Number of local control sessions	**0**
Number of pre-joined sessions	**0**
Inbound pacing value	**7**
Outbound pacing value	**7**
Maximum length of request unit	***CALC**
Text description	This field is optional

3 After you type all the values, press the Enter key.

This completes the creation of the mode description QPCSUPP.

AS/400 Device Description for Twinaxial Attachments (APPC) Example

If you want to use a twinaxial (TDLC) attachment, the AS/400 system requires that you specify a device description. When the automatic device configuration indicator (**QAUTOCFG**) is set to **ON** in the AS/400 system, the device description is created automatically. When the indicator is set to **OFF**, create the device description, as follows:

1 Enter the following command on the command line of the AS/400 system main menu:

CRTDEVDSP

The Creating Device Description(Display) panel appears.

Twinaxial Attachments

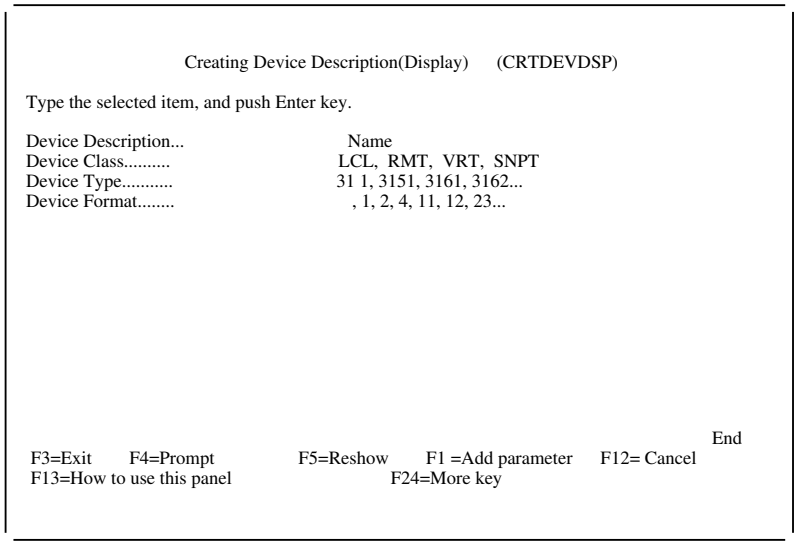

2 Type the values in each field, according to the following table.

Field Name	Input Value
Device description	This is an optional field
Device class	***LCL**
Device type	**5150**
Device format	**2**

3 After you type all values, press the Enter key.

The following screen appears:

```
                    Creating Device Description(Display)     (CRTDEVDSP)

Type the selected item, and push Enter key.

Device Description..........>TWXP A1____________ Name
Device Class................> LOL      ______      LCL, RMT, VRT, SNPT
Device Type.................>515      ______      31 1, 3151, 3161, 3162...
Device Format...............>2        ______      , 1, 2, 4, 11, 12, 23...
Port Number.................          __          -17
Switch Setting..............          __          , 1, 2, 4, 5, 6
Online when IPL.............> YES     ______      YES,    NO
Controller to be attached...          ________    Name
Keyboard Word Type..........> SYSVAL_____         SYSVAL,AGB,AGI,BLI...
Text Description............> BLANK ______________________________

F3=Exit     F4=Prompt            F5=Reshow     F1 =Add  parameter     F12=  Cancel
F13=How to use this panel                     F24=More key
```

4 Type the values for each field, according to the following table.

Field Name	Input Value
Port number	Number of the port to be attached
Switch setting	Device address
Controller to be attached	Description name of the controller to be attached
Keyboard word type	**USB**[1]

[1] Depends on the host code page selection.

5 After you enter all the values, press the Enter key.

This completes the creation of the device description for the twinaxial attachment.

AS/400 Device Description for Asynchronous Attachments Example

If you want to use an asynchronous dial attachment, the AS/400 system requires that you specify configuration parameters for the controller/line/devices to be used.

The following sample is a typical configuration on the AS/400 system for an asynchronous dialed connection through an ASCII Workstation Controller.

1 Enter the following command on the command line of the AS/400 system main menu:

WRKCFGSTS CTL CTL 3

where *CTL 3* is the name of your controller.

The Work with Configuration Status panel appears.

```
                          Work with Configuration Status

Position to . . . . . _____________    Starting characters

Type options, press Enter
   1=Vary on 2=Vary off 5=Work with job 8=Work with description
   9-Display mode status ...

 Opt    Description          Status            ----------Job----------
8_      CTL 3                  ACTIVE
__        ADLCTST               VARY ON PENDING
__        ASYNC                 VARY ON PENDING
__        ASYNCD                VARY ON PENDING
__        EZASYNC               VARY ON PENDING
__        ASYNCP                VARY ON PENDING
__        ASYNRTR               ACTIVE

                                                                      BOTTOM
Parameters or command
 ===>

F3=Exit F4=Prompt F12=Cancel F23=More options F24=More keys
```

2 Enter 8 in the Opt field to work with the controller description for CTL03.

The Work with Controller Descriptions panel appears.

```
                        Work with Controller Descriptions

Position to . . . . . _____________   Starting characters

Type options, press Enter
     2=Change 3=Copy 4=Delete 5=Display 6=Print 7=Rename
     8=Work with status 9=Retrieve source 12=Print device addresses

Opt     Controller      Type   Text
2_      CTL 3             6141   CREATED BY AUTO-CONFIGURATION




                                                                      BOTTOM
Parameters or command
  ===>
F3=Exit F4=Prompt F5=Refresh F6=Create F9=Retrieve F12=Cancel
F14=Work with status
```

3 Enter 2 in the Opt field to change the controller description for CTL03.

The Change Controller Description panel appears.

```
                     Change Ctl Desc (local WS) (CHGCTLLWS)

Controller Description . . . . . : CTL 3
Option . . . . . :  BASIC
Category of controller . . . . . :  LWS

Controller type   . . . . . : 6141
Controller model . . . . . : 1
Resource name   . . . . . : CTL 3
TDLC line   . . . . . : QTDL429
Online at IPL   . . . . . :  YES
Auto-configuration controller   . . :  YES
Text . . . . . : CREATED BY AUTO-CONFIGURATION
Device wait timer   . . . . . : 1



Press Enter to continue.
  ===>
                                                                      BOTTOM
 F3=Exit  F4=Prompt  F5=Refresh  F12=Cancel  F13=How to use this display
F24=More keys
```

4 Type the values in each field, according to the following table.

Field Name	Input Value
Controller description	CTL03
Resource name	CTL03
Online at IPL	*YES
Device wait timer	10
Auto-configuration controller	*YES
Text description	This field is optional

The Work with Controller Descriptions panel appears.

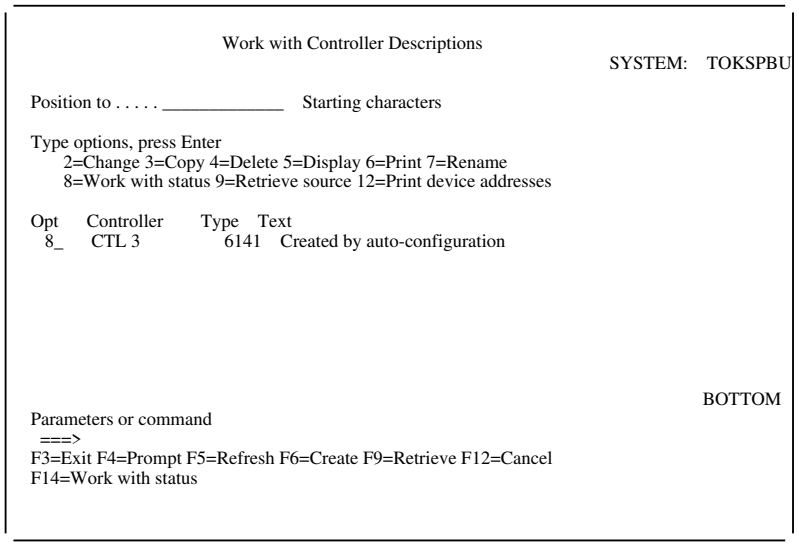

5 Enter 8 in the Opt field to work with the configuration status.

The Work with Configuration Status panel appears.

```
                        Work with Configuration Status

Position to . . . . . _____________   Starting characters

Type options, press Enter
   1=Vary on 2=Vary off 5=Work with job 8=Work with description
   9-Display mode status ...

 Opt    Description            Status            ----------Job----------
__      CTL 3                    ACTIVE
__        ADLCTST                  VARY ON PENDING
__        ASYNCPERTH               VARY ON PENDING
__        ASYNCD                   VARY ON PENDING
__        EZASYNC                  VARY ON PENDING
__        ASYNCP                   VARY ON PENDING
8_        ASYNRTR                  ACTIVE

                                                                      BOTTOM
Parameters or command
 ===>

F3=Exit F4=Prompt F12=Cancel F23=More options F24=More keys
```

6 Enter 8 in the Opt field next to ASYNRTR to work with the display device description.

The Work with Device Descriptions panel appears.

```
                        Work with Device Descriptions

Position to . . . . . _____________   Starting characters

Type options, press Enter
     2=Change 3=Copy 4=Delete 5=Display 6=Print 7=Rename
     8=Work with status 9=Retrieve source

Opt     Controller      Type    Text
 2_     ASYNRTR           515   FOR  PC4









                                                                      BOTTOM
Parameters or command
 ===>
F3=Exit F4=Prompt F5=Refresh F6=Create F9=Retrieve F12=Cancel
F14=Work with status
```

7 Enter 2 in the Opt field to change the device description.

The Change Device Description panel appears.

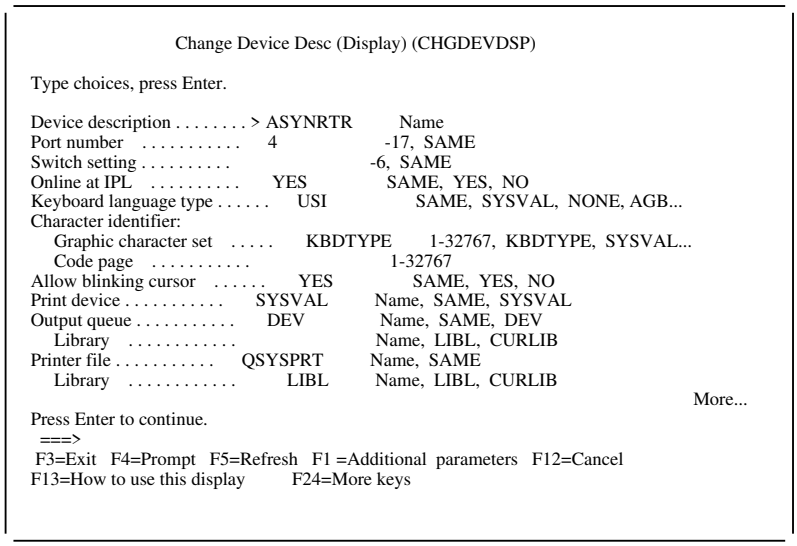

```
                    Change Device Desc (Display) (CHGDEVDSP)

Type choices, press Enter.

Device description . . . . . > ASYNRTR        Name
Port number  . . . . . .    4                 -17, SAME
Switch setting . . . . . .                    -6, SAME
Online at IPL  . . . . . .    YES             SAME, YES, NO
Keyboard language type . . . . . USI          SAME, SYSVAL, NONE, AGB...
Character identifier:
   Graphic character set  . . . . .  KBDTYPE    1-32767, KBDTYPE, SYSVAL...
   Code page  . . . . . .                     1-32767
Allow blinking cursor  . . . . . YES          SAME, YES, NO
Print device . . . . . .    SYSVAL            Name, SAME, SYSVAL
Output queue . . . . . .    DEV               Name, SAME, DEV
   Library  . . . . . .                       Name, LIBL, CURLIB
Printer file . . . . . .    QSYSPRT           Name, SAME
   Library  . . . . . .     LIBL              Name, LIBL, CURLIB
                                                                    More...
Press Enter to continue.
 ===>
 F3=Exit  F4=Prompt  F5=Refresh  F1 =Additional parameters  F12=Cancel
F13=How to use this display       F24=More keys
```

This completes the creation of the controller and display device descriptions for an asynchronous dial attachment.

AS/400 Device Description for Hayes AutoSync Attachments Example

If you want to use a Hayes AutoSync attachment, the AS/400 system requires that you specify configuration parameters for the controller/line/devices to be used.

The following sample is a typical configuration on the AS/400 system for an AutoSync connection either through an ASCII Workstation Controller (configured for a synchronous switched connection type) or the Electronic Customer Support (ECS) line.

1 Enter the following command on the command line of the AS/400 system main menu:

```
WRKCFGSTS  CTL CTL 3
```

where *CTL 3* is the name of your controller.

The Work with Configuration Status panel appears.

```
                    Work with Configuration Status

Position to . . . . . _______________   Starting characters

Type options, press Enter
    1=Vary on 2=Vary off 5=Work with job 8=Work with description
    9-Display mode status ...

 Opt    Description          Status          -------------Job--------------
8_      AUTOHAYES                CONNECT PENDING
__      AUTONAGA                 VARIED OFF
__      AUTOSYNC                 VARIED OFF
__      AUTOSYNC1                CONNECT PENDING

                                                                    BOTTOM
Parameters or command
  ===>

F3=Exit F4=Prompt F12=Cancel F23=More options F24=More keys
```

2 Enter 8 in the Opt field next to AUTOHAYES to work with the line description.

The Work with Line Descriptions panel appears.

```
                    Work with Line Descriptions

Position to . . . . . _______________   Starting characters

Type options, press Enter
     2=Change 3=Copy 4=Delete 5=Display 6=Print 7=Rename
     8=Work with status 9=Retrieve source

 Opt    Controller    Type    Text
  2_     AUTOHAYES       SDLC    Hayes Autosync Line for PC4

                                                                    BOTTOM
Parameters or command
  ===>
F3=Exit F4=Prompt F5=Refresh F6=Create F9=Retrieve F12=Cancel
F14=Work with status
```

3 Enter 2 in the Opt field to display the line description.

Hayes AutoSync Attachments

The Change Line Description panel appears.

```
                    Change Line Desc (SDLC) (CHGLINSDLC)

Type choices, press Enter.

Line description . . . . . > AUTOHAYES     Name
Resource names . . . . . .     LIN 51          Name, SAME
                 + for more values
Online at IPL  . . . . . .     YES             SAME, YES, NO
Vary on wait . . . . . .       YES             NOWAIT, 15-18  (1 second)
NRZI Data encoding . . . . . .     YES             SAME, YES, NO
Maximum controllers  . . . . . .   1               1-254, SAME
Clocking . . . . . .           MODEM           SAME, MODEM, LOOP
Line speed . . . . . .         96              SAME, 6  , 12  , 24  ...
Modem type supported . . . . . .   NORMAL          SAME, NORMAL, V54...
Modem data rate select . . . . . .     FULL            SAME, FULL, HALF
Switched connection type . . . . .     BOTH            SAME, BOTH, ANS, DIAL
Autoanswer . . . . . .         YES             SAME, YES, NO
Autodial . . . . . .           NO              SAME, YES, NO
Dial command type  . . . . . .     SAME            SAME, NONE, V25BIS
Calling number . . . . . .     NONE
                                                                        More...
 ===>
 F3=Exit  F4=Prompt  F5=Refresh  F12=Cancel  F13=How to use this display
F24=More keys
```

4 Type the required values and press Enter.

```
                    Change Line Desc (SDLC) (CHGLINSDLC)

Type choices, press Enter.

Station address  . . . . . > AUTOSYNC       1-FE, SAME
Connect poll retry . . . . . .     7               -64, SAME
Maximum frame size . . . . . .     521             SAME, 265, 521, 1 33, 2 57
Error threshold level  . . . . .   HALF            SAME, OFF, MIN, MED, MAX
Duplex . . . . . .             HALF            SAME, HALF, FULL
Modulus  . . . . . .           8               SAME, 8, 128
Maximum outstanding frames . . . .     BASIC           1-28, SAME
Inactivity timer . . . . . .       SDLC            NOMAX, 15 -42   ( .1 sec)
Poll response delay                            SAME            -2 48 (O.   1 seconds)
Nonproductive receive timer  . . .     32              16 -42   ( .1 seconds)
Idle timer . . . . . .         3               5-3   ( .1 seconds)
Connect poll timer . . . . . .     3               2-3   ( .1 seconds)
Poll cycle pause . . . . . .                       -2 48 ( .   1 seconds)
Frame retry  . . . . . .       7               -64, SAME
Data Set Ready drop timer  . . . .     6               SAME, 3-6  (seconds)
Autoanswer type  . . . . . .       DTR             SAME, DTR, CDSTL
                                                                        More...
 ===>
 F3=Exit  F4=Prompt  F5=Refresh  F12=Cancel  F13=How to use this display
F24=More keys
```

Type the required values and press Enter.

```
                    Change Line Desc (SDLC) (CHGLINSDLC)

Type choices, press Enter.

Clear to Send timer  . . . . . .    25              SAME, 1 -6  (seconds)
Remote answer timer  . . . . . .    6               SAME, 3 , 35, 4  (seconds)...
Link speed . . . . . .  . . . .     96              SAME,  INTERFACE,  MIN...
Cost/connect time  . . . . . .      128             -255,  SAME,  CNN
Cost/byte  . . . . . .  . . . .     128             -255,  SAME,  CNN
Security for line  . . . . . .      NONSECURE       SAME,  NONSECURE...
Propagation delay  . . . . . .      TELEPHONE       SAME,  MIN,  LAN...
User-defined 1 . . . . . .  . .     128             -255,  SAME
User-defined 2 . . . . . .  . .     128             -255,  SAME
User-defined 3 . . . . . .  . .     128             -255,  SAME
Recovery limits:
   Count limit  . . . . . .  . .    2               -99,  SAME,  SYSVAL
   Time interval  . . . . . .  .    5               -12  (minutes)
Text 'description'  . . . . . .     'Hayes AutoSync Line for PC4
                                                                        Bottom
Press Enter to continue.
  ===>
 F3=Exit  F4=Prompt  F5=Refresh  F12=Cancel  F13=How to use this display
F24=More keys
```

Type the required values and press Enter.

The Work with Line Descriptions panel appears.

```
                        Work with Line Descriptions
                                                        SYSTEM:   TOK38SPB

Position to . . . . . _____________    Starting characters

Type options, press Enter
     2=Change 3=Copy 4=Delete 5=Display 6=Print 7=Rename
     8=Work with status 9=Retrieve source

 Opt    Controller    Type    Text
  __     AUTOHAYES     SDLC    Hayes  Autosync  Line  for  PC4









                                                                      BOTTOM
Parameters or command
  ===> ____________________________________________________________________
F3=Exit F4=Prompt F5=Refresh F6=Create F9=Retrieve F12=Cancel
F14=Work with status
```

This completes the creation of the line description for a Hayes AutoSync attachment.

Appendix F. System/3X Configuration

To connect PC400 to a System/3X host system, you need to specify configuration information in the host system.

5250 display or printer sessions are emulated as the following devices.

Session		Device
Display Session		3197 Model C
Printer Session	5219	5219 D01
	5224	5224 001
	5256	5256 001

To configure sessions in a System/36 host, use the CNFIGSSP procedure.

To configure sessions in a System/38 host, create a device description using the CRTDEVD command.

© Copyright IBM Corp. 1989, 1996

Appendix G. Using PC Support/400 Applications with PC400

After installing PC400, you might want to continue using applications that were written for the basic and extended DOS version of PC Support/400; that is, to use such applications from a DOS prompt while PC400 is running. PC400 allows you to do this by means of its PC Support/400 Router API, which is one of the AS/400 Utilities in PC400.

To use the Router API, you must have a display or printer session connected to an AS/400 system; the DOS application will be use this session to communicate with the AS/400 applications.

The following figure shows the relationship between the values set at workstation configuration and those set, on the AS/400, for the controller description.

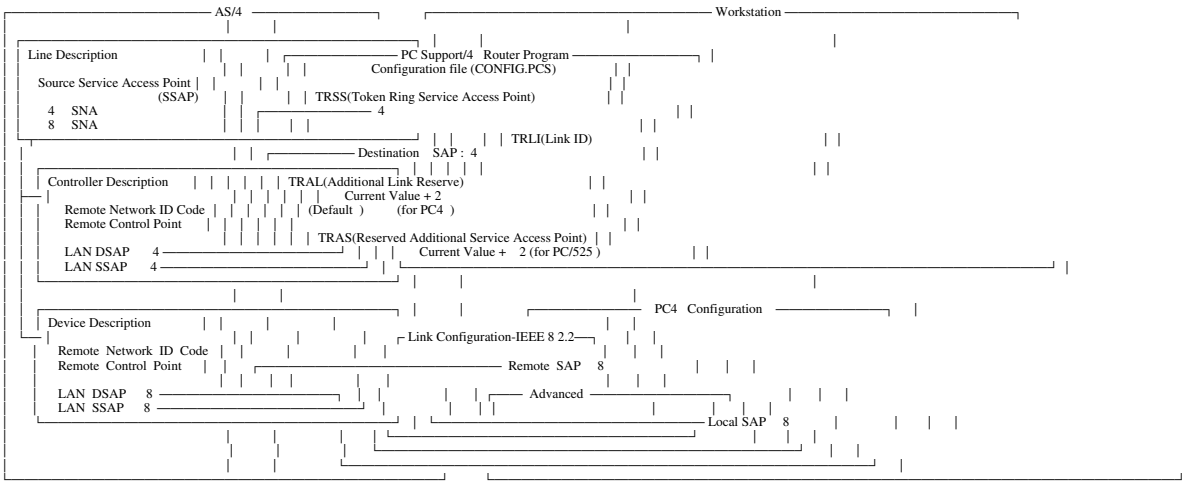

When a PC Support/400 application program is to open the adapters at startup, add 20 to the value of **Reserve Additional Link**, and 2 to the value of **Additional Service Access Point** in the configuration file (CONFIG.PCS).

© Copyright IBM Corp. 1989, 1996

Appendix H. Default Key Function Assignments

This appendix lists the functions and special keys assigned, by default, to each key on your keyboard.

To view your keyboard layout, select **Keyboard Setup** from the Assist menu and then select **Customize**.

Default Key Functions for 3270 Sessions

Table 4 shows the IBM 3278/79 key functions you can use. The column for the Enhanced keyboard applies to both the 101-key and 102-key keyboards, as well as the Space-Saving keyboard and the Microsoft Natural keyboard.

Table 4 (Page 1 of 2). Default Key Functions for PC/3270

Function of Key	Enhanced Keyboard	Host Connected Keyboard
APL	Alt+F8	Alt+F24
Attention	Esc	Attn
Alternate cursor	Alt+F11	AltCr
Blue	Ctrl+Shift+F5	Alt+F17
Back tab word	Alt+←	Alt+←
Clear	Pause	Clear
Click	Alt+F12	Click
+ CR	Alt+F12	Alt+F24
Cursor blink	Alt+F10	CrBnk
Cursor select	Alt+F9	CrSel
Delete word	Ctrl +Delete	DelWd
Display text code	Ctrl+Insert	Ctrl+Insert
Dup	Shift+Insert	Dup
End field	Pad End	N/A
Enter/Ctrl	Right Ctrl	Enter
Erase end of field	End	ErEOF
Erase field	Shift+End	N/A
Erase input	Alt+End	ErInp
Fast cursor down	Alt+↓	Alt+↓

© Copyright IBM Corp. 1989, 1996

Key Functions and Assignments

Table 4 (Page 2 of 2). Default Key Functions for PC/3270

Function of Key	Enhanced Keyboard	Host Connected Keyboard
Fast cursor up	Alt+↑	Alt+↑
Field color	Ctrl+Shift+F8	Alt+F20
Field highlight	Alt+3(pad)	F12
Field mark	Shift+Home	FldMk
Field transparency	Ctrl+Shift+8(pad)	Ctrl+Shift+9(pad)
F13 to F24	Shift+F4 to F12	F21 to F24
Green	Ctrl+Shift+F3	Alt+F15
Jump	Atl+Page Up	Jump
Opaque	Ctrl+Shift+/(pad)	Ctrl+Shift+*(pad)
PA1	Alt+Insert	PA1
PA2	Alt+Home	PA2
PA3	Shift Page Up	PA3
Pink	Ctrl+Shift+F2	Alt+F14
Print (local copy)	N/A	N/A
PSA	Ctrl+Shift+1(pad)	Ctrl+Shift+1(pad)
PSB	Ctrl+Shift+2(pad)	Ctrl+Shift+2(pad)
PSC	Ctrl+Shift+3(pad)	Ctrl+Shift+3(pad)
PSD	Ctrl+Shift+4(pad)	Ctrl+Shift+4(pad)
PSE	Ctrl+Shift+5(pad)	Ctrl+Shift+5(pad)
PSF	Ctrl+Shift+6(pad)	Ctrl+Shift+6(pad)
PS field inherit	Ctrl+Shift+0(pad)	Ctrl+Shift+0(pad)
Quit (device cancel)	Alt+Left Ctrl	Quit
Red	Ctrl+Shift+F1	Alt+F13
Reset/Ctrl	Left Ctrl	Left Ctrl
RTM	Ctrl+F11	Ctrl+F19
Reverse	Alt+*(pad)	Alt+F9
Sys request	Shift+Esc	SysRq
Turquoise	Ctrl+Shift+F6	Alt+F18
Underscore	Alt+6(pad)	F11
White	Ctrl+Shift+F7	Alt+F19
Yellow	Ctrl+Shift+F4	Alt+F16

Includes the 101-key and 102-key keyboard. The space saving keyboard is like the enhanced keyboard with the keypad omitted.
Engraved with a symbol.
Indicates the key on the main keyboard.
RTM is effective only for DFT attachment.
(pad) indicates a key on the numeric keypad.

Note: The Enhanced keyboard and the Host-Connected keyboard have some duplicated keys. The functions of the duplicated keys are the same except when you specify a single key. For example, *Del* means any Delete key, whereas *Pad Del* specifies only the Delete key on the numeric keypad.

Default Key Functions for 5250 Sessions

Table 5 shows the key functions you can use.

Note: If you are using PC400 from the combined package, refer to "Extra Key Functions (3270 and 5250 Sessions)" on page 157.

Table 5 (Page 1 of 3). Default Key Functions for the PC400 Package

Function of Key	Enhanced Keyboard	122 Keyboard
Alternate cursor	Alt+F11	Alt+F23
Attention	Esc	Attn
Backspace	← (Backspace)	←
Backtab	Shift+← |	| ←
Backtab word	Alt+←	Alt+←
Begin of line	Ctrl+4 (pad)	Ctrl+4 (pad)
Begin underscore	Ctrl+U	Ctrl+U
Bold	Ctrl+B	Ctrl+B
Bottom of page	Ctrl+2 (pad)	Ctrl+2 (pad)
Carrier return	Ctrl+Enter or Ctrl+– (pad) or Ctrl++ (pad)	Ctrl+– (pad) or Ctrl+← | (pad)
Center text	Ctrl+C	Ctrl+C
Clear	Pause	Clear
Cursor blink	Alt+F10	Alt+F22
Cursor down	↓ or 2 (pad)	↓
Cursor left	← or 4 (pad)	←
Cursor right	→ or 6 (pad)	→
Cursor up	↑ or 8 (pad)	↑
Delete	Delete or .(pad)	Delete
Delete word	Ctrl+Delete or Ctrl+.(pad)	Alt+Delete
Display Text Code	Ctrl+Insert	Ctrl+Insert
Dup	Shift+Insert	PA1
End bold/underscore	Ctrl+J	Ctrl+J
End of line	Ctrl+6 (pad)	Ctrl+6 (pad)
End of page	Ctrl+P	Ctrl+P
Enter	Enter/Ctrl	Enter
Erase end of field	End or 1 (pad)	ErEOF
Erase input	Alt+End	Alt+Pause
Fast cursor down	Alt+↓ or Alt+2 (pad)	Alt+↓

Key Functions and Assignments

Table 5 (Page 2 of 3). Default Key Functions for the PC400 Package

Function of Key	Enhanced Keyboard	122 Keyboard
Fast cursor up	Alt+↑ or Alt+8 (pad)	Alt+↑
Field plus (+)	+ (pad)	Alt+— | (pad)
Field minus (–)	– (pad)	– (pad)
Field exit	Enter (pad) or ↵ (Enter)	Enter (pad) or ↵
Field mark	Shift+Home	PA2
F1 to F12	F1 to F12	F1 to F12
F13 to F24	Shift+F1 to F12	F13 to F24
Home	Home or 7 (pad)	Alt+Rule
Half index down	Ctrl+H	Ctrl+H
Half index up	Ctrl+Y	Ctrl+Y
Help	Alt+F1	Alt+F1
Insert symbol	Ctrl+A	Ctrl+A
Insert toggle	Insert or 0 (pad)	Insert
Jump to next session	Alt+PageUp	Jump
Mark down	Shift+↓	Shift+↓
Mark left	Shift+←	Shift+←
Mark right	Shift+→	Shift+→
Mark up	Shift+↑	Shift+↑
Move mark down	Ctrl+↓	Ctrl+↓
Move mark left	Ctrl+←	Ctrl+←
Move mark right	Ctrl+→	Ctrl+→
Move mark up	Ctrl+↑	Ctrl+↑
New line	Shift+ ↵ (Enter)	Shift+ ↵
Next column	Ctrl+D	Ctrl+D
Next stop	Ctrl+N	Ctrl+N
Print screen (host)	Ctrl+Pause	Alt+F13
Required backspace	Ctrl+ — (Backspace)	Ctrl+ —
Required space	Ctrl+Space	Ctrl+Space
Required tab	Ctrl+— |	Ctrl+— |
Reset/control	Left Ctrl	Reset
Roll up	3 (pad) or PageDown	3 (pad)
Roll down	9 (pad) or PageUp	9 (pad)
Stop code	Ctrl+S	Ctrl+S
System request	Shift+Esc	Shift+Attn
Tab to next unprotected field	— |	— |
Tab to next word	Alt+→	Alt+→
Test request	Alt+Pause	Alt+Copy
Top of page	Ctrl+8 (pad)	Ctrl+8 (pad)

Table 5 (Page 3 of 3). Default Key Functions for the PC400 Package

Function of Key	Enhanced Keyboard	122 Keyboard
Underscore field	Alt+6 (pad)	Alt+F11
Word underscore	Ctrl+W	Ctrl+W

pad indicates a key on the numeric keypad.

Extra Key Functions (3270 and 5250 Sessions)

If you are using Personal Communications from the combined package, the following key function assignments (for PC400) are added to the default key function assignments.

Table 6. Default Key Functions

Function of Key	Enhanced Keyboard	Host Connected Keyboard
Character advance	Shift+Backspace	N/A
Field minus (–)	–(pad)	N/A
Field plus (+)	+(pad)	N/A
Help	N/A	Ctrl+F1
Host print	N/A	Ctrl+F13
Roll down	Page up	Alt+PA2
Roll up	Page down	Alt+Jump

N/A Not Available on this keyboard
(pad) Indicates a key on the numeric keypad

Notices

References in this publication to IBM products, programs, or services do not imply that IBM intends to make these available in all countries in which IBM operates. Any reference to an IBM product, program or service is not intended to state or imply that only IBM's product, program, or service may be used. Subject to IBM's valid intellectual property or other legally protectable rights, any functionally equivalent product, program, or service may be used instead of the IBM product, program, or service. Evaluation and verification of operation in conjunction with other products, programs, or services, except those expressly designated by IBM, are the user's responsibility.

IBM may have patents or pending patent applications covering subject matter in this document. The furnishing of this document does not give you any license to these patents. You can send license inquiries, in writing, to the IBM Director of Licensing, IBM Corporation, 500 Columbus Avenue, Thornwood, NY 10594, U.S.A.

For license inquiries regarding double-byte character set (DBCS) information, contact:

IBM World Trade Asia Corporation Commercial Relations
IBM Kamiya-cho Building, 4-3-9 Toranomon, Minato-ku
Tokyo, Japan

Licensees of this program who wish to have information about it for the purpose of enabling: (i) the exchange of information between independently created programs and other programs (including this one) and (ii) the mutual use of the information which has been exchanged, should contact:

Site Counsel
IBM Corporation
P.O. Box 12195
3039 Cornwallis Road
Research Triangle Park, NC 27709-2195
USA

Such information may be available, subject to appropriate terms and conditions, including in some cases, payment of a fee.

The licensed program described in this document and all licensed material available for it are provided by IBM under terms of the IBM Customer Agreement.

This document is not intended for production use and is furnished as is without any warranty of any kind, and all warranties are hereby disclaimed including the warranties of merchantability and fitness for a particular purpose.

© Copyright IBM Corp. 1989, 1996

Trademarks

The following terms are trademarks of the IBM Corporation in the United States or other countries or both:

AnyNet
Application System/400
AS/400
IBM
Micro Channel
OfficeVision/400
OfficeVision/MVS
Personal System/ValuePoint
Personal System/1
Personal System/2
PS/1
PS/2
Quietwriter
SNA
ThinkPad

Windows is a trademark of Microsoft Corporation.

PC Direct is a trademark of Ziff Communications Company and is used by IBM Corporation under license.

UNIX is a registered trademark in the United States and other countries licensed exclusively through X/Open Company Limited.

Other company, product, and service names, which may be denoted by a double asterisk (**), may be trademarks or service marks of others.

Glossary

A

adapter. A hardware component that must be installed in the PC to connect to the SDLC, LAN, asynchronous, DFT, or other communications attachment (possibly connecting through a modem).

American National Standard Code for Information Interchange (ASCII). The standard code, using a coded character set consisting of 7-bit coded characters (8 bits including parity check), that is used for information interchange among data processing systems, data communication systems, and associated equipment. The ASCII set consists of control characters and graphic characters. See also *Extended Binary-Coded Decimal Interchange Code*.

attachment. A communications link used by Personal Communications to connect a PC to a host system, consisting of an adapter and controlling software.

B

backup diskette. A diskette that contains information copied from a Personal Communications diskette.

binary. Pertaining to the base two system of numbers. The binary digits are 0 and 1. Executable files are generally in binary format rather than the character string format that text files are composed of.

C

Caps Lock. The PC keyboard mode entered after the Caps Lock key is pressed. This mode is indicated by a capital A in the operator information area (OIA). When the Shift key is pressed while in this mode, Caps Lock is temporarily discontinued and the OIA indicator changes. Pressing the Shift key again returns the Caps Lock mode.

character set. A finite group of characters defined for a keyboard or output device.

configuration. (1) The arrangement of a computer system or network as defined by the nature, number and chief characteristics of its functional units.
(2) In Personal Communications, the arrangement of PCs connected to one or more host systems by one or more attachment types.

continuous carrier. A characteristic of the modem used in an SDLC type of attachment; frequency capable of being modulated or impressed with a second (informative carrier) signal.

customization. The process of configuring one or more PCs connected to a host system by the SDLC, LAN, ASYNCH, TDLC or other attachment. Customization precedes Personal Communications installation and includes the definition of the sessions to be carried out by Personal Communications.

D

default. A value, attribute, or option that is assumed when no differing selection is made.

dial-up line. See *switched line*.

directory. A named hierarchical grouping of files in a file system.

downloading. The transfer of a file from a host system to a PC.

E

EBCDIC. See *extended binary-coded decimal interchange code*.

enhanced graphics adapter (EGA). An adapter, such as the IBM Enhanced Graphics Adapter, that provides high-resolution graphics, allowing the use of a color display for text processing as well as graphics applications.

Extended Binary-Coded Decimal Interchange Code (EBCDIC). The standard code, using a character set consisting of 8-bit coded characters, used by Personal Communications for information interchange between

© Copyright IBM Corp. 1989, 1996

PCs and a host system. See also *American National Standard Code for Information Interchange*.

F

field. (1) An area in a record or panel used to contain data.
(2) In the IBM 3270 or 5250 data stream, a group of consecutive positions on a presentation space having similar characteristics, which are defined by a field attribute byte at the beginning of the field.

H

hard disk. A rigid-magnetic disk such as the internal disks used in the system units of PCs and in external hard disk drives (also known as a fixed disk).

I

International Telecommunication Union - Telecommunication Standardization Sector. A telephonic media communications standards committee.

interrupt level. A number assigned to an interrupt to indicate priority. The interrupt with the lowest number has the highest priority.

ITU-T. See *International Telecommunication Union - Telecommunication Standardization Sector*.

L

LAN. See *local area network*.

leased line. Synonym for *nonswitched line*.

line speed. The speed at which data is transferred over an analog (telephone) line. Line speeds depend on the quality of the line.

local area network (LAN). A data network in which communications are limited to a moderate-sized geographic area such as a single office building, warehouse, or campus, and which do not generally extend across public rights-of-way.

logical unit (LU). A port that provides user access to the host and to the SNA network in order to communicate with another user.

logon. The process of accessing a domain and assuming a user ID.

LU. See *logical unit*.

LU 6.2. A type of LU that supports sessions between two applications in a distributed data processing environment using the SNA general data stream, which is a structured-field data stream, or a user-defined data stream.

N

network. A configuration of terminals connected to a host system for information interchange.

nonswitched line. (1) A connection between systems or devices that does not have to be made by dialing. Contrast with *switched line*. (2) A telecommunication line on which connections do not have to be established by dialing. Synonymous with *leased line*.

Num Lock. The keyboard mode entered after the Num Lock key is pressed. This mode is indicated by NUM in the operator information area (OIA). When the Shift key is pressed while in this mode, Num Lock is temporarily discontinued and the OIA indication changes. Pressing the Shift key again returns to Num Lock mode.

O

OIA. See *operator information area*.

OIA indicator. Characters or symbol in the operator information area providing information about network, workstation, gateway, or interface status. See also *operator information area*.

operator information area (OIA). In Personal Communications, the bottom line of a PC screen, which shows information on status and Personal Communications connections.

P

PC Network. A local area network providing peer-to-peer communication among IBM personal computers, allowing them to share resources. It utilizes carrier sense multiple access/collision detect (CSMA/CD) protocol and supports a data transmission rate of 2 million bits per second. Broadband and baseband versions are available.

permanent virtual circuit (PVC). In X.25 and frame-relay communications, a virtual circuit that has a logical channel permanently assigned to it at each data terminal (DTE). Call-establishment protocols are not required. Contrast with *switched virtual circuit (SVC)*.

personal computer. A microcomputer primarily intended for stand-alone use by an individual, but may be connected to mainframes or networks.

presentation space. The entire window of data, which can exceed the boundaries of a display screen's viewing area.

public application. An application shared among users on a network.

S

SAP. See *service access point*.

SDLC. See *Synchronous Data Link Control*.

service access point (SAP). The gateway address of the controller. This provides a point to link the controller to the host system.

session ID. An alphabetic ID (**a** through **h**) assigned by Personal Communications to each session or screen. This applies to all types of host sessions and is used in file transfers. See also *short name*.

Shift Lock. The PC keyboard mode entered after the Shift Lock key is pressed. In this mode, the keyboard performs the function printed on the upper half of the keytop. Press the Shift key to cancel the Shift Lock mode.

short name. In Personal Communications, a character displayed in column 7 of the operator information area that shows the session ID. See also *session ID* and *operator information area*.

SNA. See *Systems Network Architecture*.

SNA network. The part of a user-application network that conforms to the formats and protocols of Systems Network Architecture. It enables reliable transfer of data among end users and provides protocols for controlling the resources of various network configurations. The SNA network consists of network addressable units (NAUs), boundary-function components, and the path control network.

source diskette. In a diskette copying procedure, the diskette from which information is read.

SVC. See *switched virtual circuit*.

switched line. A telephonic communication line on which connections are established by dialing. See also *switched virtual circuit*. Contrast with *nonswitched line*.

switched virtual circuit (SVC). (1) An X.25 circuit that is dynamically established when needed. The X.25 equivalent of a switched line. (2) A virtual circuit that is requested by a virtual call. It is released when the virtual circuit is cleared. Contrast with *permanent virtual circuit (PVC)*.

Synchronous Data Link Control (SDLC). A discipline for managing synchronous, code-transparent, serial-by-bit information transfer over a line connection. Transmission exchanges may be duplex (in both directions at the same time) or half-duplex (in either direction, one direction at a time) over switched lines or direct lines.

Systems Network Architecture (SNA). A set of rules for controlling the transfer of information in a layered protocol structure communications network. The logical structure, formats, protocols, and operating sequences for transmitting data and controlling network configuration and operation are defined.

T

token-ring network. (1) A ring network that allows unidirectional data transmission between data stations, by a token passing procedure, such that the transmitted data return to the transmitting station. (2) A network that uses a ring topology, in which tokens are passed in a circuit from node to node. A node that is ready to send can capture the token and insert data fir transmission.

transferring files. Sending files from a PC to a host system or vice versa. See *downloading* and *uploading*.

U

uploading. The transfer of a file from a PC to a host system.

V

video graphics adapter (VGA). A computer adapter that provides high-resolution graphics and a total of 256 colors. See *enhanced graphics adapter (EGA)*.

W

WAN. See *wide area network*.

wide area network (WAN). A network that provides data communication capability in geographic areas larger than those serviced by local networks.

Index

Numerics

3270 Emulation Credit Card 107
3270 passthru 120
3270 session screen printing 43
5250 PCMCIA 125

A

adapters
  3270 Emulation Credit Card 107
  attachment types 26
  communication 91
  Ethernet 110
  OEM Twinax support 11
  PCMCIA 94
  Token-Ring 110
  twinax 95, 126
  Xircom Pocket 3270 110
Advantis (IIN) 117
AnyNet
  considerations 120
  description xi, 9
  restriction 9
APAR fix 89
APPC Networking Services, description x
APPC3270 120
appearance 53
AS/400
  3270 passthru 120
  configuration examples 133
  device description
    for asynchronous attachments 140
    for Hayes AutoSync attachments 144
    for twinaxial attachment 137
  error messages 121
  ODBC 12
  system mode description 136
  system setup 120
  Utilities 9, 63
assigned drive settings, saving 67
assigning
  a drive 66
  user-defined PSIDs 122
asynchronous attachment, AS/400 device
  description 140
Asynchronous Console, AS/400 requirements 123
automatically starting sessions 38

B

batch file
  creating 34
  editing 37
  i option 35
  q option 35
  using 33
bulletin board 89

C

Chameleon 17
changing a workstation profile 28
character sequences, unsupported 119
CMS file printing 43
coax attachment, considerations 105
color mapping 53
COMM 646 10
communication check 50x 119
CONFIG.PCS 151
CONFIG.SYS
  5250 adapter 126
  card services enabler 127
  EMM386.EXE 126
  point enabler 127
  twinax adapter 126
configuration
  changing 28
  creating 25
  information 133
  saving 27
configuring
  a session 25
  AS/400 133
  PC400 133
conflicts between SDLC adapters and COM2 117
considerations and restrictions
  Advantis (IIN) 117

© Copyright IBM Corp. 1989, 1996

Index

considerations and restrictions *(continued)*
AnyNet 120
APPC3270 120
attachment via AS/400 system 120
coax attachment 105
console sessions 123
Home3270 119
IBM Global Network Connection 118
LAN via IEEE 802.2 110
LAN via IPX/SPX 112
PCS/400 Router API 69
SDDLU 121
SDLC 115
shared folders 68
SNA 121
TCP/IP attachment 113
twinaxial (console) 123
virtual printer 71
Windows NT 115
contacting IBM 86
Controller Language for CUT Attachment 106
conventions used in this book ix
copylink 46
creating
a batch file 34
a macro 61
the AS/400 system mode description 136
customer support, online 89
CUT attachment, functions not available 106

D

Data Transfer
description 13, 63
overview 64
types of 64
Database Access
description 12
icon 3
overview 73
requirements 73
DB2/400 12
DDE/EHLLAPI 45
default key functions 153—157
combined package 157
PC/3270 153
PC400 package 155
definitions, PSID 122
desktop 31
device conflict 118
device description
AS/400 135
for asynchronous attachments 140
for Hayes AutoSync attachments 144
for twinaxial attachments (APPC) 137
directories created during installation 97

E

emulator sessions
exiting 38
stopping 38
enabling DDE/EHLLAPI 45
error messages from the AS/400 system 121
existing batch file 37
exiting sessions 38

F

file transfer 49
fonts 53
form feed options, printing 11
forum, customer 89
FTP 17
functions not available with CUT attachment 106

G

Global Network 10, 118

H

Hayes AutoSync
AS/400 connection 6
AS/400 device description 144
System/390 connection 5
help, online 79
hiding
the menu bar 54
the tool bar 54
windows 39
home page, internet 89
Home3270 119
hotspots 56
how to
perform communication check 50x 119
use online help 79

I

i option 35
IBM service 86
IBM, contacting 86
icons, Personal Communications 2
IIN 117
installation
  diskette 19
  network 21
  network option 22
  removing 24
  system administrator option 21
installing Personal Communications
  from a network 21
  from a network server 22
  on a network server 21
Internet home page 89
introduction of Personal Communications 1
ISDN 10

K

key functions
  default 153, 157
  description 55
key functions and assignments
  combined package 157
  PC/3270 153
  PC400 package 155
keyboard
  file 57
  setup 57
keyboard/macro functions 55

L

LAN adapter considerations 110
LAN via IEEE 802.2 attachment 110
LAN via IPX/SPX
  connection considerations 112
  NetWare for SAA attachment 112
library, Personal Communications 85
licensing agreement 159
line speed
  Advantis (IIN) attachment 117
  Home3270 attachment 119
  SDLC attachment 116

M

machine check 207 105
macro
  description 60
  functions 55
  statements 61
  usage 61
memory requirements
  for Personal Communications 15
  for Windows 16
messages 80
modems
  configuration for Advantis (IIN) 118
  supported 93, 94
mouse
  file 60
  setup 59
multiple sessions 33

N

NetBIOS device driver parameters 111
NetManage 17
NetWare for SAA
  gateway attachment 112
  setup 130
network
  installation option 22
  installing from 21
  installing on 21
Novell LAN WorkPlace 17

O

ODBC 3, 12
OEM Twinax adapter support 11
OfficeVision 43
OIA indicators
  communications reminder 83
  input inhibit 82
  keyboard and printer conditions 83
  message waiting 83
  session information 81
online help 79
Organizer, PC 75

Index

P

passthru 120
pastelink 46
pausing macro recording 62
PC Organizer 75
PC Support/400
  applications 151
  Router API 69, 151
PCMCIA configuration 107
PCOMM forum 89
PCS/400 Router API 69, 151
PCSADLC.EXE 103
PCSHAM.EXE 103
PCSMON Trace Setup 11
PCSREMOV.EXE 24
PCSTSR.BAT 103
PCSWIN.BAT 102
PCSWS.EXE 33
PDT 42
PDT files 42
Personal Communications
  directories 97
  functions 4
  icons 2
  library 85
  overview 4
  program window 2
  removing 24
  requirements 15
  subdirectories 97
pop-up keypad
  (poppad) file 58
  setup 58
poppad color 59
print screen 41
printer definition
  file 42
  table 42
printing
  description 41
  form feed options 11
  function 43
  PROFS/OV note, calendar, document 43
  ZipPrint 43
private subdirectory 22
processing environment 15
PROFS/OV note, calendar, document printing 43
PSID definitions 122

Q

q option 35
quit macro recording select 62

R

receiving data from the host 64
related publications 85
releasing drives 66
removing Personal Communications 24
requirements
  hardware 15
  storage 16
  workstation 15
Response Time Monitor 12
router sessions 8
RTM 12
running
  copylink 46
  pastelink 46

S

sample
  AS/400 device description for twinaxial attachment 137
  AS/400 device descriptions for asynchronous attachments 140
  AS/400 device descriptions for Hayes AutoSync attachments 144
  PC400 configuration 135
saving
  assigned drive settings 67
  configuration information 27
  memory 115
SDDLU 121
SDLC attachment
  considerations 115
  performance consideration 116
sending data to the host 64
service information 89
service, statement 86
sessions
  automatically starting 38
  configuring 25
  exiting 38
  icons for 25, 31
  multiple 33
  starting 31

sessions *(continued)*
  stopping 38
  window 31
setting the printer to be used 42
setting up
  a macro 62
  the mouse 60
  the pop-up keypad 59
  the printer 41
Shared Folders
  description 63
  DOS command limitations 68
  DOS command restrictions 68
  DOS limitations 68
  introduction 65
  requirements 65
  starting 66
sharing a LAN adapter 111
showing
  the menu bar 54
  the tool bar 54
  windows 39
SNA considerations 121
SNA-A 5
SNA-over-Async 5, 6
Software Solutions Center 90
spreadsheet, copying table data 46
starting
  configuration setup 25
  from the session window 32
  macro playing 62
  multiple sessions 33
  sessions 31
  with a batch program 33
  workstation profiles from Program Manager 33
stopping
  macro playing 62
  sessions 38
subdirectories
  PDFPDT 98
  private 22, 97
  SDK 98
system files
  AUTOEXEC.BAT 98
  PCSTSR.BAT
    PCSADLC.EXE 103
    PCSHAM.EXE 103
  PCSWIN.BAT 102
  Personal Communications 98
  SYSTEM.INI
    VdoshlID.386 101
system files *(continued)*
  SYSTEM.INI *(continued)*
    VpollD.386 99
    VslanD.386 100
    VtdlcD.386 101
    VvlanD.386 100
  WIN.INI 99
System/36 11, 149
System/38 11, 149
System/3X configuration 149
SYSTEM.INI 99

T

TalkLink 89
TCP/IP
  connection considerations 113
  for DOS, IBM 17
technical assistance 86
Telent 5250 9
Telnet 3270 10
text assist 77
text conventions ix
tool bar customization 11
trace functions 11
trademarks 160
transferring
  a window's appearance 53
  data 64
  files 49
trim print 41
Trumpet 17
twinax (console) 123
twinax attachment, AS/400 device description 137
types of
  Data Transfer 64
  hotspots 57

U

uninstalling Personal Communications 24
unsupported character sequences 119
using
  an Ethernet adapter 111
  database access 74
  hotspots 56
  PC Support/400 applications 151
  PDT files 42
  text assist 77
  the ODBC driver 73

using *(continued)*
the PC organizer 75
the pop-up keypad 59
the printer 41
the virtual printer 70
the Windows printer driver 42
Utilities, AS/400 9

V

VdoshllD.386 101
Vint21hD.386 102
virtual printer 13, 70
Vpcsrtrd.386 101
VpollD.386 99
VslanD.386 100
VtdlcD.386 101
VvlanD.386 100
VvprtD.386 102

W

WaveRunner 10
WIN.INI 99
window
appearance 53
setup 53
view 39
windows 386-enhanced mode 115
Windows NT 9, 115
workstation profile 27, 33
workstations supported by Personal Communications 15

X

XEDIT work-space printing 43
Xircom Pocket 3270 Adapter 110

Z

ZipPrint 2, 43

Communicating Your Comments to IBM

Personal Communications
AS/400 and 3270 for Windows
Up and Running
Version 4.1

Publication No. SC31-8261-00

If you especially like or dislike anything about this book, please use one of the methods listed below to send your comments to IBM. Whichever method you choose, make sure you send your name, address, and telephone number if you would like a reply.

Feel free to comment on specific errors or omissions, accuracy, organization, subject matter, or completeness of this book. However, the comments you send should pertain to only the information in this manual and the way in which the information is presented. To request additional publications, or to ask questions or make comments about the functions of IBM products or systems, you should talk to your IBM representative or to your IBM authorized remarketer.

When you send comments to IBM, you grant IBM a nonexclusive right to use or distribute your comments in any way it believes appropriate without incurring any obligation to you.

If you are mailing a readers' comment form (RCF) from a country other than the United States, you can give the RCF to the local IBM branch office or IBM representative for postage-paid mailing.

If you prefer to send comments by mail, use the RCF at the back of this book.

If you prefer to send comments by FAX, use this number:

United States and Canada: **1-800-227-5088**

If you prefer to send comments electronically, use this network ID:

- IBM Mail Exchange: **USIB2HPD at IBMMAIL**
- IBMLink: **CIBMORCF at RALVM13**
- Internet: **USIB2HPD@VNET.IBM.COM**

Make sure to include the following in your note:

Title and publication number of this book
Page number or topic to which your comment applies.

Help us help you!

Personal Communications
AS/400 and 3270 for Windows
Up and Running
Version 4.1

Publication No. SC31-8261-00

We hope you find this publication useful, readable and technically accurate, but only you can tell us! Your comments and suggestions will help us improve our technical publications. Please take a few minutes to let us know what you think by completing this form.

Overall, how satisfied are you with the information in this book?	Satisfied	Dissatisfied

How satisfied are you that the information in this book is:	Satisfied	Dissatisfied
Accurate		
Complete		
Easy to find		
Easy to understand		
Well organized		
Applicable to your task		

Specific Comments or Problems:

Please tell us how we can improve this book:

Thank you for your response. When you send information to IBM, you grant IBM the right to use or distribute the information without incurring any obligation to you. You of course retain the right to use the information in any way you choose.

Name

Address

Company or Organization

Phone No.

Help us help you!
SC31-8261-00

IBM

Cut or Fold
Along Line

Fold and Tape **Please do not staple** Fold and Tape

NO POSTAGE
NECESSARY
IF MAILED IN THE
UNITED STATES

BUSINESS REPLY MAIL

FIRST-CLASS MAIL PERMIT NO. 40 ARMONK, NEW YORK

POSTAGE WILL BE PAID BY ADDRESSEE

Information Development
Department CGMD
International Business Machines Corporation
PO BOX 12195
RESEARCH TRIANGLE PARK NC 27709-9990

Fold and Tape **Please do not staple** Fold and Tape

SC31-8261-00

Cut or Fold
Along Line

IBM®

Part Number: 39H0507

Printed in the United States of America

SC31-8261-

39H 5 7